amateur radio

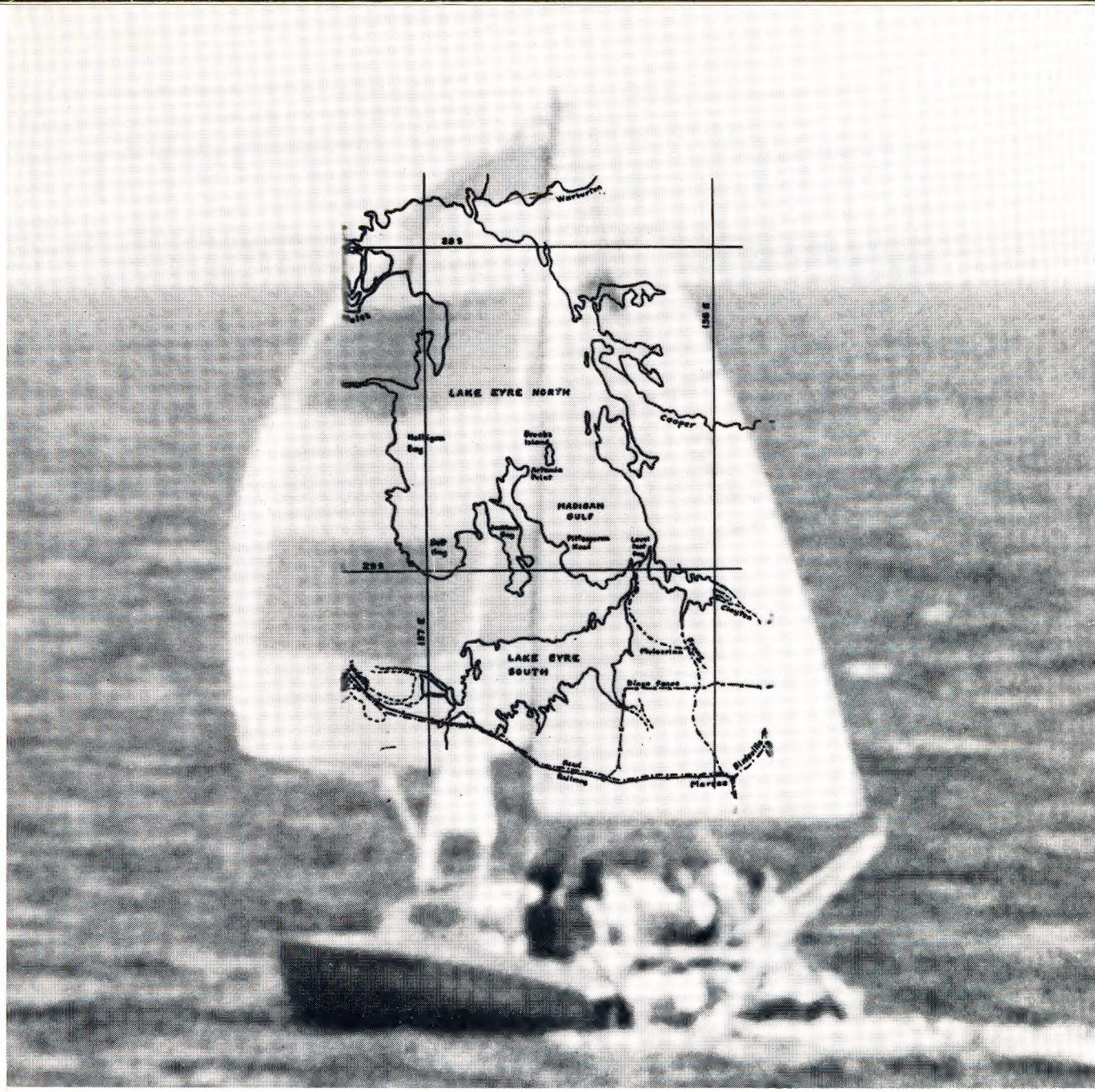

VOL. 43, No. 8 AUGUST 1975

CONTENTS

TECHNICAL

Amateur Building Blocks — Pt. 2	14
Bench Power Supply	9
Commercial Kinks	25
Newcomers Notebook	25

GENERAL

On Eyre	5
VHF/UHF Advisory Committee Proposed Band Plans	7

DEPARTMENTS

Afterthoughts	4
Awards Column	29
Contests	27
Hamads	30
Letters to the Editor	27
Magazine Index	30
Project Australis	30
QSP	3
Silent Keys	30
VHF-UHF — An Expanding World	29
WIA News	4
20 Years Ago	29

COVER PHOTO

The "Red Baron" and Lake Eyre are almost synonymous to many Australian amateurs. The story of this land-locked mobile-marine expedition appears on page 5.

JOURNAL OF THE WIRELESS INSTITUTE OF AUSTRALIA

HAM RADIO SUPPLIERS

323 ELIZABETH STREET, MELBOURNE, VIC., 3000

Phones: 67-7329, 67-4286 All Mail to be addressed to above address

Our Disposals Store at 104 HIGHETT ST., RICHMOND (Phone 42-8136) is open Mondays to Fridays, 10.30 a.m. to 5.0 p.m., and on Saturdays to midday.

ALSO AT:

390 BRIDGE RD. RICHMOND. 42 5174

AND DISPOSALS STORE:

104 HIGHETT ST. RICHMOND. 42 8136

27 MHz TRANSCEIVERS AND ANTENNAS SUITABLE FOR NOVICE AMATEUR USE

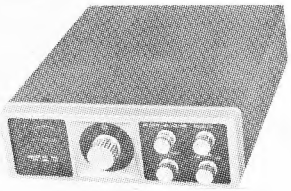

SE501 23 CHANNEL TRANSCEIVER
5W AM, 15W PEP SSB, 12V DC operation **$195**

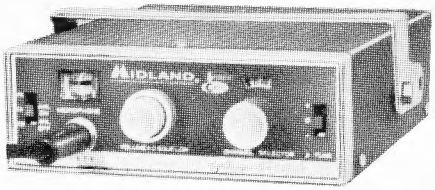

MIDLAND 13-870D 23 CHANNEL TRANSCEIVER
5 Watts AM, 12V DC Operation **$99**

¼ WAVE FIBREGLASS MOBILE ANTENNAS
With insulator and heavy spring base **$35**

CENTRE LOADED FIBREGLASS MOBILE ANTENNA AND BASE
43 in. long **$16.90**

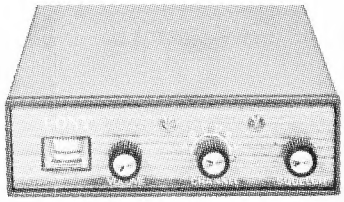

PONY CB74A 6 CHANNEL TRANSCEIVER
5 Watts AM, PMG approved for 27.880 MHz operation. Fitted with 27.880 and 27.240 crystals **$105**

MIDLAND TWIN METER TYPE SWR BRIDGE AND POWER METER **$25**

COMMUNICATION RECEIVERS AND TRANSCEIVERS

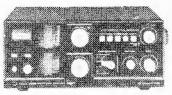

Kenwood QR666 general coverage communications receiver, solid state, 550 kHz — 30 MHz, 6 bands. 230V/12V.
Price $330

BARLOW WADLEY XCR30 Mk. II RECEIVER — LATEST MODEL $259

KENWOOD TS 520 5 BAND SSB TRANSCEIVER

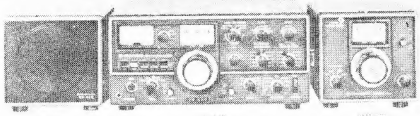

Specifications

Frequency Range: 80 metre band — 3.50 to 4.00 MHz; 40 metre band — 7.00 to 7.30 MHz; 20 metre band — 14.00 to 14.35 MHz; 15 metre band — 21.00 to 21.45 MHz; 10 metre band — 28.00 to 28.50 MHz, 28.50 to 29.10 MHz, 29.10 to 29.70 MHz; WWV — 10.00 MHz.

Mode (Receive only) USB, LSB, CW.
Input Power: 160 watts on 80 to 15 metre band, 140 watts on 10 metre band.
Nett amateur prices:

TS 520 $550.00 with PTT Mike

YAESU MUSEN FT101B
SSB/AM 240V AC & 12V DC operation,
160-10m transceiver **$585**

YAESU FT/FP200 TRANSCEIVER P.S.U. COMBINATION **$400**

144-148 MHz TWO METRE EQUIPMENT

NOW WITH 6 CHANNELS

KEN KP-202, 2W, 144 MHz band. FM. Hand held transceiver with crystals for 6 channels, Ch. 40-50, R1, R2, R3, R4 **$150**

KCP-2 NICAD battery chargers & 10 Nicad batteries **$35**

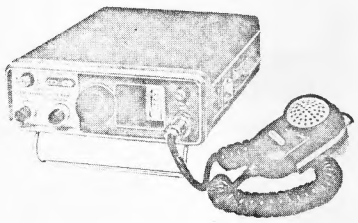

KENWOOD MOBILE TR7200C

2 METRE FM TRANSCEIVER

22 Channels, fitted with Ch. 1 and 4 repeaters. Technical Data: Transmit 10 and 1 watt positions. Max. freq. deviation +15 kHz. Spurious response —60dB. Receiver less than 1W for 30 dB SW selectivity. 20 kHz at 60 dB down; 40 kHz at 70 dB down.

$235 — Extra Channel Crystals $10 Set

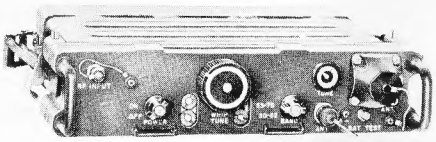

RF AMPLIFIER AM-4306/GRC

Originally used in conjunction with PRC25 which covers 30-75 MHz FM. Requires 1-4 watts drive and gives a nominal 25 watts out. Brand new in sealed box with complete service and user manuals.

$25 each

amateur radio

JOURNAL OF THE WIRELESS INSTITUTE OF AUSTRALIA, FOUNDED 1910

AUGUST 1975
VOL. 43, No. 8
Price: 70 cents

Published monthly as the official journal by the Wireless Institute of Australia.

Reg. Office:
2/517 Toorak Rd., Toorak, Vic. 3142
P.O. Box 150, Toorak, Vic., 3142

Editor:
Bill Roper VK3ARZ

Assistant Editor:
Bruce Bathols VK3UV

Technical Editors:
Bill Rice VK3ABP
[illegible]n Cook VK3AFW
[illegible]y Roper VK3YFF

Publications Committee:
John Adcock VK3ACA
Rodney Champness VK3UG
Syd Clark VK3ASC
Ron Fisher VK3OM
Ken Gillespie VK3GK
Neil Osborne VK3YEI
Ken Reynolds
Gil Sones VK3AUI

Contributing Editors:
Brian Austin VK5CA
Deane Blackman VK3TX
David Hull VK3ZDH
Eric Jamieson VK5LP
Jim Payne VK3AZT

Drafting Assistants
Gordon Rowe L30187
Harry Cane VK3ZIK

Business Manager:
Peter B. Dodd VK3CIF

Enquiries and material to:
[illegible] Editor,
PO Box 2611W, GPO Melb., 3001

Copy is required by the **third of each month.** Acknowledgment may not be made unless specially requested. All important items should be sent by certified mail. The Editor reserves the right to edit all material, including Letters to the Editor and Hamads, and reserves the right to refuse acceptance of any material, without specifying any reason.

Advertising:
Advertising material should be sent direct to **P.O. Box 150, Toorak, Vic., 3142,** by the **25th of the second month preceding publication. Phone: 24-8652.**

Hamads should be sent direct to **P.O. Box 150, Toorak, Vic., 3142,** by the **3rd of the month preceding publication.**

Printers:
EQUITY PRESS PTY. LTD.
50-52 Islington Street
Collingwood, 3066
Tel.: 41-5054, 41-5055

QSP

ON LAUNCHING WIA NEWS

It has now become possible to organise a regular column in AR — WIA NEWS (pronounced wire news) giving publicity to Federal Institute affairs both at the national and international level.

You must be the judge as to the value of the column, but remember that you can communicate amongst yourselves much more quickly than it takes WIA NEWS to see the light of day in AR because it is at least one month old when it reaches you.

Reluctance to publicise Federal news through the medium of AR is sometimes labelled as a failure. Inability to find someone to write such a column has been the real cause of all the troubles.

Whichever way your views prompt you, please remember that AR circulates all over the world. The desire not to publicise our troubles for the delectation of overseas readers has been in the back of our minds, but perhaps we have been too reticent about ourselves, and too self-conscious to admit our weakness.

The WIA is by no means a perfect organisation. We have our own serious inflation problems. We try to accommodate views which are poles apart while doing our best to avoid fence-sitting. Genuine efforts are always made in the best short and long term interests of amateur radio in Australia.

Priorities constantly vary to meet whatever aspects are currently under discussion.

The Executive must tender an account of its actions to the Federal Council.

This Federal Council consists of your Divisional Federal Councillor, plus one from each of the other six Divisions.

All Divisions must have their say. Some may feel more strongly than others on certain issues. Nevertheless, if we are to operate effectively, all views are required.

WIA NEWS is presented by the executive so that you can be informed of Institute affairs and form effective opinions. Your Divisional Federal Councillor wants to know your views.

D. A. WARDLAW VK3ADW
Federal President ■

DARWIN APPEAL

The Executive announce that the appeal for donations for those losing gear during Cyclone Tracy in the Darwin area

WILL CLOSE ON 1st SEPTEMBER 1975

- **PLEASE SEND IN YOUR DONATION NOW**

The following is List No. 3 of contributors:—

Amount already acknowledged		$207.70
per VK4 Division		$24.28
VK6 Division		$37.50
VK3YQ		$4.00
per VK5 Division		$50.00
(VK5SE	$3.00	
VK5ZB	$5.00	
VK5NX	$5.00	
VK5PX, I5PML	$8.00	
VK5QX	$10.00	
VK5 Division	$19.00)	
per VK1 Division		$40.90
(L20781	$2.00	
L20657	$2.00	
VK1QJ	$2.00	
LF0018	$2.00	
VK1TR	$2.00	
VK1DS	$2.00	
VK1NE	$2.00	
VK1ZJJ	$2.00	
VK1RH	$2.00	
VK1VP	$3.00	
VK1ADP	$2.00	
VK1MS	$2.00	
VK1YS	$1.00	
VK1DA	$2.00	
per VK1EP	$12.90)	
Geelong Hamfest Society		$600.00
TOTAL TO DATE		$964.38

■

The **VK2 DIVISION** would like all persons and QSL Bureaus to note that the G.P.O. Box 1734, will be cancelled later this year.

Mail should be directed as follows:
VK2 Inwards QSLs to:
P.O. Box 134, Charlestown, 2290
VK2 Outwards QSLs to:
P.O. Box 96, Frenchs Forest, 2086.
Other Divisional Mail to:
14 Atcheson St., Crows Nest, 2065.

SCOUTS STATIONS

In his bulletin 18/2 of 28th May Noel Lynch, JOTA organiser, advised that the Boy Scouts of Korea now have a scouting station on the air from 31st May with the call sign HM0S. He also mentions a diploma for contacting stations on a stated number/points scored system from 1st May to 31st July, relating to Algerian Scouts celebrating the 40th anniversary of scouting in that country. For those interested write to 7X2 S.M.A. Service Diploma DQA. SMA. Scouts Musulmans Algerians. B.P. 69, Alger-bare.

PIRATES

A man was fined $350 in Canberra recently for illegally transmitting broadcasts from a motor vehicle on an amateur frequency and the gear had been seized. It is understood that the case was defended.

REFLECTION

The editorial in Short Wave Magazine for May '75 gives food for thought and can only be briefly summarised here. Austin Forsyth G6FO wrote — "In these days of rapid development in the art of

WIANEWS

Pressures of business to be conducted by the Executive became so great that 1970 saw agreement between the Divisions to employ a Secretary and to set up an office.

A very small office was established in 1971 and it is still small. That year the Divisions saw the advantages of centralised membership records and subscriptions processing. An EDP programme was done in time for the 1972 subscription year.

Also in 1971 "Magpubs" was added to the little Federal office's duties.

In 1972 the publication of AR was handed over to the Executive. In the same year the Executive's office was moved from the Victorian Division's rooms to Toorak. It had been hoped that a joint office would have been more economical than separate offices but so many problems arose which only a move could resolve.

The Federal body does what the Divisions, acting as Federal Council, tells it to do.

The Executive office began with one person — the Secretary/Manager — with clerical and typing assistance. This person was engaged to put into effect the directives of the Executive. He was engaged on a proper salary for expertise, co-ordination and administrative abilities. That salary (with all allowances) by the way is today only 8 per cent higher than it was in 1971.

Unfortunately the work load has increased out of all proportion from the time when the concept of a Secretary/Manager was envisaged in 1970.

In 1973 the Executive recognised this and authorised the employment of a part-timer to do all the EDP and subscriptions work. This part-timer, after training, allowed the Secretary/Manager and his clerk/typist to concentrate on the more important duties of the office — negotiations with Central Office, co-ordination of numerous functions, dissemination of information to Divisions and a host of other administrative and organisational work.

In 1974 it was obvious that the time available to service AR advertising and to get more of it could be improved profitably by employing a part-timer solely for this work. This has paid off. Check the advertising in AR now compared with 1973 for example.

AR, centralised subscriptions processing, membership records, and Magpubs cannot function without a central office. AR could not be distributed without an addressing service for example.

Your AR now reaches you through a computer label addressing system which is part of EDP. In the old days a laborious, time-consuming addressing plate system was in operation.

In the old days each Division prepared, mailed, collected and accounted for their own members' subscriptions. Ask anyone who was involved what time and effort were needed from volunteers year in and year out. In Divisions with the largest membership paid staff were even required.

Improvements are required even if to meet changing conditions from year to year. The Executive has this in mind all the time. Unfortunately very little can be done in the face of severe inflationary financial stresses except to improve efficiency and productivity.

Remember what you used to get for your £2 sub? But then numbers of members were fewer and perhaps you didn't realise the work put in by unpaid volunteers behind the scenes. In those days AR made a profit at 6d a copy. You can't even buy a newspaper for 5 cents today.

Perhaps this is a slight exaggeration but have you compared your present subscriptions to other societies or clubs with what you paid them 10 or 20 years ago?

The 1975 Federal Convention approved the appointment of an Investigator *to put the whole WIA machine under a microscope and to come up with some answers.*

Have you any ideas how the WIA can be improved?

A tremendous amount of thought has been given to publicising *amateur radio in Australia, improving its image and encouraging more members.*

One of the big problems is getting good publicity into the media on every possible occasion. Ever tried to convince a newspaper editor to publish a sweet little blurb about what amateur radio is about or what amateur operators did under such-and-such an emergency?

Apart from this one time effort, even if you succeed, how ma will read it and how long will it stay in the public's memory? Vice, murder, sport, political bickerings. These seem to be the money spinners.

The yawn of a hippo is puny compared with the yawn of an editor when confronted with amateur radio. But his yawn is just as great on a whole range of other beneficial subjects unless he can "smell" a juicy story.

Anything which can be done to get favourable publicity for our leisure activity is good. Not merely a one time hit. It must go on and on, all the time.

What would you do if you read in your newspaper that amateurs ("hams" of course) were really 007 agents working undercover for the secret service of a foreign power or were Martians in humanoid form?

Would all of you put pen to paper and bombard the editor with letters of correction? And yet this kind of rubbish hits the media from time to time.

Somehow a beneficial and tiny minority group of a few thousand must keep its good works before the eyes of the public millions.

The ACT Division has been given the job of examining ways and means to produce an economically feasible publicity package and film for Divisions for use at shows, exhibitions and for displays to adult and high school groups.

How about offering them your help? Write now to P.O. Box 11 Canberra City, ACT, 2601.

An often asked question: Does the WIA represent the Australian amateur to the authorities? Yes! Six consultations on various matters occurred during the month of June alone between the Executive office and the Central office of the Radio Branch. ■

---

electronics — for it is now an art as well as a science — the field is so vast that no one individual can have much knowledge, and certainly very little experience, outside his own range of activity. The cleverest men are those who realise how little they know and how much there is to learn. As radio amateurs, many of us are not bound by the limitations of the professional radio engineer, who has to keep his mind on the particular aspect of the subject that earns him his living. As freelance radio men, we can range over the whole field at will" and he lists a vast range of subjects. He thinks the amateur generally may be a more competent practical man than his professional confrere and it is this fact that enables the amateur to be a useful and important member of the whole fraternity of radio men.

CITIZENSHIP

April QST carries an item that the (USA) amateur rules have been amended to delete references to citizenship or nationality with respect to eligibility for amateur license. The new rules require each licensee to furnish an address in the U.S.A. The only aliens not eligible to obtain an amateur licence, so it appears, are representatives of foreign governments.

IN BAND TRANSMISSIONS

April '75 QST quotes a clarification by FCC of the rules for amateur transmissions making it plain that both wanted and unwanted products must be confined to the amateur bands within the limits of good practice. An example is quoted of a type A3J emission which limits the carrier power level to at least 40 dB below P.E.P. and in relation to unwanted sidebands and intermodulation products lays down three steps of acceptable attenuation.

ELF

"The spectrum below 10 kHz (at present unallocated) is far from being a forgotten territory and is the centre of much attention in the communications world at the present time". Extract from an article entitled "Radio Communications at frequencies below 10 kHz" by G3XBM in April '75 Rad. Comms.

SUNSPOT NUMBERS

Smoothed mean for Nov. '74 was 27.6. Mean for May 1975 provisionally 8.7. The predictions of smoothed monthly sunspot numbers drop from 9 in June by one a month to 4 in Nov. '75. Swiss Fed. Obs. Zurich bulletin 5/1975. ■

Afterthoughts

An omission from the published results of the VK/ZL Oceania DX Contest 1974:

VK SWL:	L30042	3900
	L4018	2640

Sorry about some photographs reproduced back to front although the printers say this was impossible! Top right hand picture on P4 of June AR and front cover photograph of July AR were thus maltreated.

ASJA monetary award is $15 not $10 as shown on P4 of March AR. ■

ON EYRE

W. M. Rice VK3ABP
54 Maidstone St., Altona 3018

During the May 1975 school vacation, VK3s NS, ABP, YBP and YFF made history by operating marine-mobile from Lake Eyre for the first time ever. This is the story of their expedition.

In 1840, the explorer Edward John Eyre was the first white man to see Australia's largest lake. For 109 years its 9300 square kilometres (named Lake Eyre by Goyder in 1859) was never known to carry more than a few centimetres of water, lying above 40 cm of solid salt. Spanning the latitudes 28 and 29 deg. S, about 700 kilometres north of Adelaide, its occasional salty pools soon dried out under a cloudless sky where solar evaporation can be up to 2 metres each year.

The lake was mapped by J. W. Lewis in 1874-5, first flown over by G. H. Halligan in 1922, and extensively explored by C. T. Madigan between 1929 and 1939. Madigan, who was Professor of Geography at Adelaide University, was of the opinion that the lake could never fill. Although fed by several large rivers, the Warburton and Cooper's Creek being the best known, they are seldom more than dry beds with occasional waterholes. The Lake Eyre Basin covers more than a million square kilometres, about one sixth of the continent, but most of this area is desert, with an average annual rainfall of less than 100 mm.

Then, in 1949, the greatest floods for more than a century filled the inland rivers, and by 1950 Lake Eyre was truly a lake, with up to three metres of water covering its area. An attempt was made to launch a sailing-boat on the lake in 1950, but it was soon swamped by large waves. Before long the seasons returned to normal, and by 1953 the lake was once again dry.

SPEED RECORD

World history was made in July 1964, when the late Donald Campbell established the still-current speed record for a wheel-driven vehicle of 690.9 kilometres per hour over a prepared strip on the bed of Lake Eyre. This story is told in great detail by John Pearson in his book *"Bluebird and the Dead Lake" (Collins, 1965).* The strip was located in the south-east corner of the lake in the area known as Madigan Gulf. Headquarters for the record-breaking team was at the homestead of Muloorina Station, about half-way between the southern shore and the nearest town of Marree about 110 km to the south-east. Muloorina, established by the late Elliot Price in 1942, is a cattle station of hundreds of square kilometres of sand and saltbush, and is the nearest permanent settlement to the lake. The homestead is adjacent to several waterholes in the normally-dry Frome River, around which grow numerous sizable trees in a landscape otherwise marked by no trees at all.

The author first saw Lake Eyre in 1969, from one of the scheduled civil aircraft which daily link Darwin with Adelaide. In spite of the height and distance it was still impressive, although at the time completely dry. But weather is always setting new records, and in February 1973 extremely heavy rain fell over most of Queensland, breaking an eight-year drought, and bringing floods down the Diamantina and Barcoo into the Warburton and Cooper. Lake Eyre began to fill for the second time in 133 years, only 24 years after the first!

In September 1973 the author flew over the southern end of the lake in a light aircraft, seeing for the first time in his life the vast expanse of water where dazzling white salt was usual; and an idea began to germinate. No one had ever before operated on the amateur bands from a boat on Lake Eyre. Someone had to be first!

PLANNING

Obviously, with limited funds available, one cannot organise transport, equipment and personnel overnight for such an expedition. What type of boat could be used? The water might be too shallow to launch a boat big enough for several people plus equipment. Fuel would be a problem; a sailing boat would overcome that. But sailing boats usually have keels or centreboards needing a metre or more of water. Perhaps a catamaran? With a weatherproof cabin? No such craft existed, at least not one easy to transport over rough dirt roads for long distances. Power supply? Obviously car batteries. Solid-state transceivers, naturally; they didn't have them in 1950!

While all these factors were being considered, and time rushed on, the lake might have been fast drying up again. But Nature stepped in and poured more floods into the system early in 1974. Lake Eyre, by the end of that year had a greater depth of water in it (about four metres) than had ever been known before. And up in Darwin a man named Neil Fowler had devised a sailing boat which became known as the Red Baron.

Based on Fowler's design, the Western Australian firm of Ken Hill and Dale Cameron began to produce a unique fibreglass craft; a catamaran nearly 6 metres long and 2.4 metres wide, with a cabin in which four people could sleep. The 6 metre mast carried as a minimum about 13 square metres of sail. Yet the boat could be towed anywhere on its lightweight trailer by an ordinary car, and best of all, required only 30 cm of water, not only to float but to sail. And the alloy extrusion mast, insulated at its base by the fibreglass hull, looked a natural choice for an all-band antenna when fed through a suitable transmatch.

Hill and Cameron's Victorian agent, a dedicated yachtsman named Roger Bullock, was approached in February 1975 and was immediately enthusiastic. His only Red Baron could be made available after the Sailboat 75 exhibition in April. He himself would be delighted to take part in the expedition, particularly since the plans by now envisaged making a documentary film to publicise the Lake, the amateur radio aspect, and not least, the boat. Besides, for a couple of weeks anyway, we could all get away from the approaching Melbourne winter!

FILM

The idea of making a professional quality movie of the expedition had been thought about for 12 months, but it was only because of the technical expertise of Tim Robinson VK3YBP that it eventually became possible. Tim had been an enthusiastic movie-maker for several years, and owned a good proportion of the 16 mm equipment which would be needed. Not only that, but he knew where and from whom the rest could be borrowed or cheaply hired. The outlay for the film could therefore be held down to not much more than the cost of film-stock and processing. Even so, this was a sizable amount of money, but not beyond the team's joint resources. The audio side of the venture was looked after by Roly Roper VK3YFF, who was also no newcomer to the movie art.

A number of HF licensees had hoped to take part in the expedition, but unfortunately several could not leave their work for the necessary week or two. This by now had been decided as the period 10-25 May

1975, the first term school vacation, permitting wives and children to join the party. Ultimately there were only two HF operators, Jack Taylor VK3NS and the author VK3ABP. Even so, it was a sizable party of 17 people who left Melbourne at various times on the 9th and 10th of May and headed for Adelaide in four cars. Space was fully utilised in the vehicles and trailers, as all food and water (about 300 litres) had to be carried, plus sufficient tents and camping gear including gas stoves, lights, and a refrigerator. Battery charging was provided for with a *"home-brew"* portable wind-powered generator, plus an engine driven outfit if the wind proved inadequate.

SAFARI

Besides the Red Baron on its trailer, Roger's car also carried a lightweight 4 metre *"Surf Cat"* catamaran on a roof rack. Quite an eye-catching combination on the road, and few people travelling at the time between Melbourne, Adelaide and points north failed to notice it, judging by comments later heard by party members! Incidentally there was also a 3 kW outboard motor in case the Baron ran out of wind.

The team left Adelaide on Sunday morning (11 May), and arrived that night at Hawker, to enjoy the last luxury for a week or so at the Outback Motel. Monday's travelling over somewhat less-than-perfect roads (Hawker marks the end of the bitumen) was hard on trailer fittings, fuel tanks, overloaded roof-racks, and mufflers, but Muloorina was reached just before sunset without serious mishaps. On advice from Keith Price, whose family runs the station, that the remaining 50 km to the Lake was no worse than roads already covered, the convoy pressed on into the darkness, and arrived at the shore of Level Post Bay about 8 p.m. There were some overnight visitors already there around a campfire (they brought the firewood with them!), and their gallant offer of cups of tea all round was gratefully accepted by 17 weary travellers. The tents were set up on top of the sand dunes by flashlight, (the new moon had not yet risen).

After a brief (also flashlight) inspection of the beach and the water, and some marvelling at the myriads of stars shining from the unpolluted and cloudless sky, it was time for bed.

BLUE WATER

Tuesday 13th May, and daylight displayed the great expanse of blue water that was Madigan Gulf, extending northward to the horizon and far beyond, yet still representing only about one-sixth of the area of the Lake. The Baron was eased on its trailer down the slope to the beach, and by mid-morning the largest sailing craft ever on the Lake was afloat. In the event, there was no depth problem; the water was 2 metres deep within 10 metres of the beach. The next few hours were spent in rigging the boat and installing the home-brew SSB transceiver. A plate had been fitted under the stern of the starboard hull and from this a wire was run up to the cabin for connection to the 9000 sq km ground-

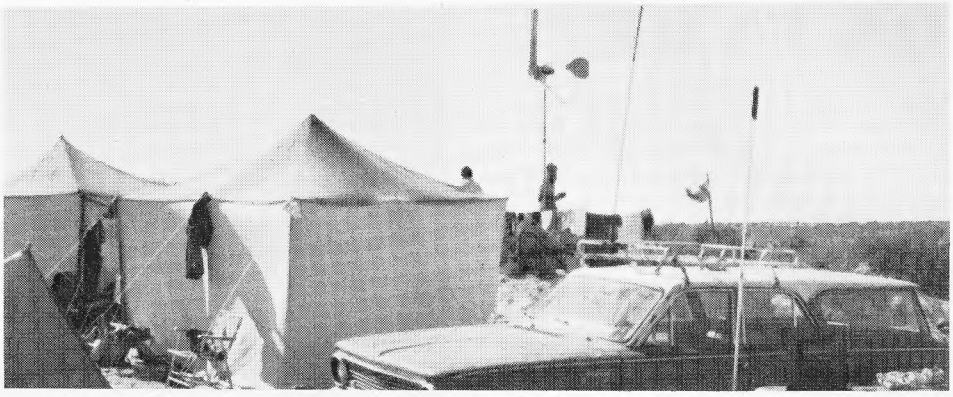

plane! The SWR indicator and transmatch (the Rollerless Ultimate from QST of November 1973) were connected to the base of the mast, which was conveniently accessible electrically via a bolt through the cabin roof. Part of what is normally a double bunk was used as the operating table, and the battery was stowed underneath it.

After a late lunch, sailing nowhere in particular the first ever marine-mobile contact from Lake Eyre was made about 3 p.m. with Hughie VK5BC, who was land-mobile at the time, on 40 metres. It would be nice to say that QSOs followed thick and fast after that, but before long there was evidence of sad lack of ampere-hours in the rather old battery, and after a short QSO with Snow VK3MR it was necessary to go ashore and fire up the generator.

BROOKS ISLAND

Wednesday 14th May proved to be the highlight of the trip. By mid-morning there was a good south-westerly blowing, so plans were made to sail up to Brooks Island at the north-west corner of the Gulf about 25 nautical miles distant. A crew of 5 (Roger and Noelene Bullock being the sailors, plus VK3s YBP, YFF and ABP) set out about 11 a.m. with provisions for two meals, and more reliable batteries than before. VK3NS stayed ashore to monitor the proceedings, and with his help the first 20 metre DX was worked from the boat (VE7UZ, WB4SWS and WA6VGJ) plus a few VKs. Reports were somewhat discouraging, and it was obvious that 50 watts PEP and a distinctly non-directional antenna were going to make DX difficult. From a non-radio viewpoint the trip was exhilarating., The course was west to near Pittosporum Head, then NNW towards Artemia Point. For three hours on this leg there was no land in sight, and the waves were up to a metre high. The sun shone brilliantly, cabin temperature was about 28 degrees C, gulls and pelicans flew overhead, and it was hard to realise the boat was 500 km from the sea (and incidentally, about 12 metres below sea-level).

Brooks Island was reached just before sunset. The trip had taken longer than expected, mainly due to the heavy load aboard reducing speed to about 4 knots at the best. At some time the Baron must have crossed the track used by Donald Campbell, but he was faster! It had been hoped to set foot on the island, which is about 7 by 3 km in size and reputed to have a fresh-water spring, but there was neither time nor provisions to anchor for the night. So, as darkness fell and the wind held fair, sail was set for home. At this stage operations were transferred to 80 metres, in the hope of working all VK during the night, but the static was bad and few QSO's were made except reports Jack giving progress at intervals. Navigation involved little more than keeping the compass heading on south-east, with occasional checks on 146 MHz to establish range from the camp. Jack's 146 MHz signal was first heard about midnight, and the beacon light he had rigged was sighted about an hour later. Surprisingly, it was dead ahead! By this time the wind had dropped almost to nil, so the last few miles were run on the outboard motor, and the crew staggered ashore at camp about 3 a.m. After 16 hours afloat, one tends to stagger on terra firma! Incidentally, who fired a green flare at 2310 CST on 14 May from somewhere east of Madigan Gulf, or was it a particularly bright meteor?

The remainder of the stay was less eventful, mainly because lack of good winds prevented any more long trips being made. Being ashore every night, no more MM contacts were made on 80 metres. Daytime activity, seldom more than a few km from base, was mostly on 20, and for the last three days Jack's FT 101 B was used in the boat, which helped a little with DX, being at least twice the power of the 3ABP rig. On Friday 16th an attempt was made to sail down Goyder's Channel (which connects Lake Eyre North to the much smaller Lake Eyre South), but rather less than half-way even the Surf Cat grounded in soft mud with only about 20 cm of water covering it.

WEATHER

One gratifying feature of the visit was to hear from those worked how bad the weather was in Adelaide and Melbourne, cold, windy, raining; but the Lake Eyre sun was warm all day every day, and the nights quite mild. Enjoyment was tempered by the realisation that before long we too would have to go South and back to winter again. Visitors for the last night at the Lake were Ron VK3AFW, Ian VK3ZDW and their families returning home from Alice Springs, so they also had the opportunity of a brief sail on the Gulf before helping to separate the Baron from the water on the morning of 20th May.

It is a sobering thought to realise that in another two or three years of normal seasons all the vast body of water that is Lake Eyre will have reverted to dry salt. Already there are many thousands of dead fish around its shores as the water falls and the salinity rises. But perhaps this once in a century phenomenon may recur more frequently in the future. Perhaps the weather pattern is changing and the Lake becoming permanent. Who knows? But we will return some day with a sailing craft again, even if needs be a land-yacht! To those who worked us either portable or in the boat, some rather special QSLs will be on their way when we have had them printed. And we hope that all our readers and many others will be able to see our documentary film on television some time in the next few months.

In the meantime we can proudly claim to have been first-ever marine-mobile Lake Eyre (102 stations in 5 countries); to have travelled further under sail on the lake (about 75 nautical miles) than anyone before; and in the largest sailing boat ever seen there: and to have been first under sail to navigate any significant distance (25 nm) across the lake by night. Hopefully the future may allow someone else to outdo some of these claims, but the first can never be contested. ■

VHF/UHF ADVISORY COMMITTEE PROPOSED BAND PLANS

During 1974, the VHF/UHF Advisory Committee proposed a draft band plan for the 70 cm amateur band. This was duly published in the October 1974 issue of AR. Prior to publication it had been forwarded to Divisions for comment. If you have not read the article, or forgot its contents, then dig it out and read it now. The explanations in general remain true for this new plan, although some of the frequencies have been altered in accordance with APO requirements.

During 1974 and early 1975 the Executive office entered into a number of negotiations with the Central Office of the APO during which the case for beacons and repeaters in the 70 cm band was put (23 cm was also discussed but no favourable decision has as yet been achieved).

On 20th March the Central Office wrote to the Executive indicating that repeaters and beacons would be given favourable consideration provided they operated only between 430 and 440 MHz.

The VHFAC then set out to redraft the plan for 70 cm. At the same time it was considered expedient to prepare a more detailed draft for the first 500 kHz of the tuneable section of all bands.

The result is shown in Figs 1 and 2 of the diagram.

Both plans are self-explanatory, and reference should be made to the original article in October 1974 AR. However, a few points are worth mentioning. With respect to the tuneable section, it can be seen that the segment has been divided into three broad categories:

1—DX. 2—Local. 3—Beacons.

Calling frequencies have been nominated. Many of these frequencies are in current use. Some are new. The calling frequencies are mainly related to DX operation. However it can be seen that a second SSB/AM calling frequency has been nominated on .200. This could be known as the secondary calling frequency and would normally be used for local operation.

Calling frequencies are suggested as follows:

CW	.025
Meteor Scatter — all modes	.050
RTTY	.075
SSB/AM	.100 (primary DX calling)
SSB/AM	.200 (secondary local calling)
SSTV	.300

Beacons could be established between .4 and .5 with some overflow down to .35 allowable in certain areas.

The 70 cm Band Plan is self-explanatory. Presently the actual net frequencies and repeater input and output frequencies are being considered. The Federal Repeater Committee should soon be in a position to nominate some channels so as to get the ball rolling in this area.

Further negotiations must now take place with the APO before final approval can be granted. The Executive is hopeful that at least some channels can be agreed to readily by the APO.

Details relating to the remainder of the 6 metre and 2 metre bands will follow at a later date.

Peter Wolfenden VK3ZPA
Chairman VHAC ■

PROPOSED W I A BAND PLANS

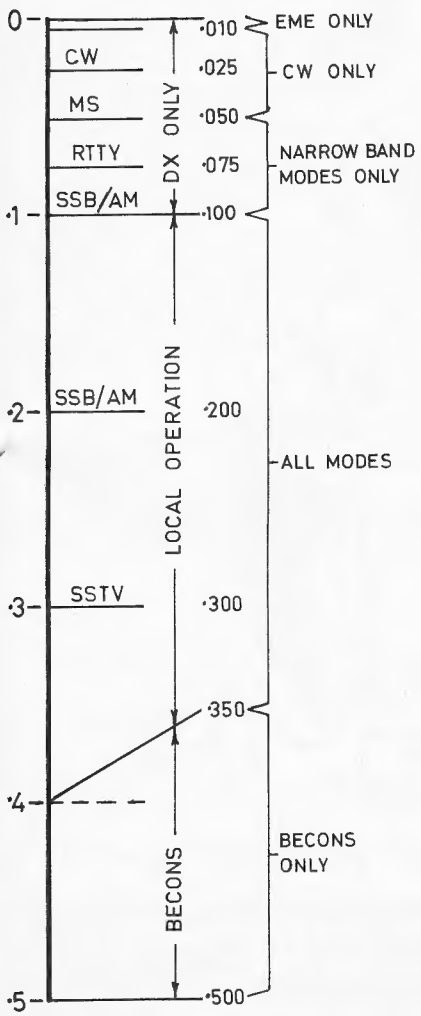

FIG 1 PLAN FOR TUNABLE PORTION OF ALL VHF & UHF BANDS

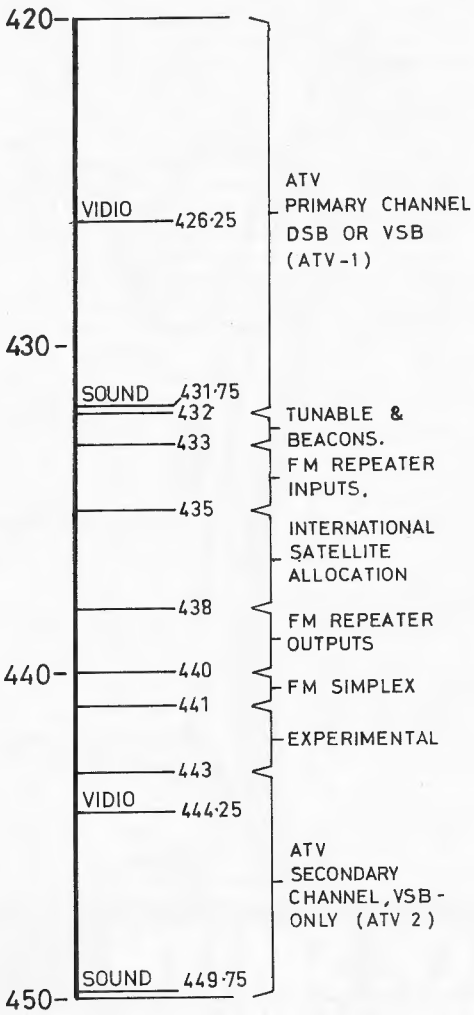

FIG 2 70 cm BAND PLAN (VHFAC 6/75)

Fantastic Offer

Dick Smith Electronics Pty Ltd

Associated Companies: Dick Smith (Sales) Pty Ltd, Dick Smith (Wholesale) Pty Ltd.
Electronic Enthusiasts Centre
Car Radios : Hi Fi : Tools : Books
Kits : Amateur Radio
Electronic Components

162 Pacific Highway, Gore Hill, P.O. Box 747 Crows Nest 2065 N.S.W.
Tel: 439 5311 (5 lines)
24hour STD: 439 5344

Dear Amateurs, Just back from overseas and look at all the goodies I've found you. Check below – you'll want the lot!! Dick.

HAM NOTEBOOK
A continual best seller, HAM NOTEBOOK in just a few short months has well established itself as an important part of any amateur's library.
This book is taken from the best of HAM RADIO's popular Ham Notebook section and has a wide variety of short ideas and projects on virtually every phase of amateur radio. ~~$4.50~~

$3.50

JABEL ALIGNMENT TOOL PACK No. 2
A handy set for the serviceman and specially intended for colour TV work. Two non conductive tools, one with two screwdriver blades, the other with hex head type keys, to fit most cores. Supplied in case

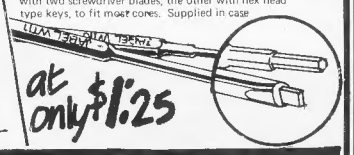

at only $1.25

NEW ICOM IC22A

ICOM IC22A 2M TRANSCEIVER

Features:
- *146–148 MHz in 22 Channels*
- *RF Out 10W/1W Switchable*
- *Mode F3*
- *Deviation 3–16 KHz Adjustable*
- *Dynamic PTT Mic Supplied*
- *5 Helical Resonators in Front End*
- *Receiver Sensitivity 0.4uV, 20dB Quieting*
- *Audio Output 1.5W into 8 Ohms*
- *Power Requirements 13.5V ± 15%*

The IC22A is Icom's new and improved version of the very popular IC22. The IC22A is ideally suitable for home or mobile use. We are offering this unit with 3 channels, i.e. channel 50 simplex and channels 42/54 and 48/60 repeat.

INCLUDING 3 CHANNELS of crystals

ONLY $200

(P & P Insured anywhere in Australia $3.00).

TEN SETS TO BE GIVEN AWAY FREE

Not only is this unit to be sold at a very competitive price but EVERY purchaser will help his Division of the WIA to obtain a FREE IC22A.

For every ten units purchased, Dick Smith will donate one to your nominated Division or Club. These units are ideal for repeater use or WICEN emergency activities.

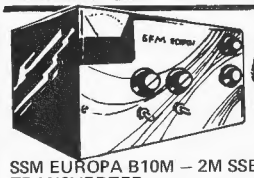

Osker fans 200watt

SSM EUROPA B10M – 2M SSB TRANSVERTER
The Europa B is a linear transmit and receive transverter 28–30MHz to 144-146MHz. It is suitable for use with either a transceiver or a separate receive/transmitter. It is ideal for Oscar operation as well as normal tropo work. Although its primary use is for SSB, it will receive and transmit any mode of which the H.F. equipment is capable: SSB, AM, CW, FSK, FM. Once attached to your H.F. equipment, you operate it exactly the same as on the H.F. bands, the Europa B does the rest.

$229 (Road Freight $3.00 extra).

NEW TAX FREE PRICE LIST NOW AVAILABLE (yes BC108 trans from 9c) SEND S.A.E.

ANTENNATION! FAMOUS RAK ANTENNAS

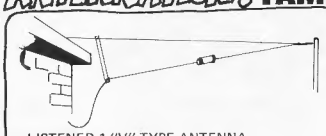

LISTENER 1 "V" TYPE ANTENNA
Covers 3 to 30mHz with special trap – completely assembled and ready for installation. Ideal for "DX" reception. $18.75 p&p $1.00

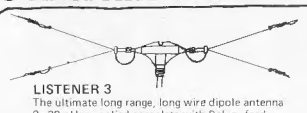

LISTENER 3
The ultimate long range, long wire dipole antenna 3–30mHz supplied complete with Balun, feed wax (45') VHF plugs, insulators, extremely large gauge aluminium wire and nylon support rope. Originally designed for professional use, but ideal for the serious short wave listener who requires the best. $42.50 p&p $2.00

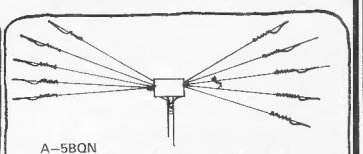

A–5BQN
Deluxe multiband transmitting & receiving antenna – Yes this is the ideal system for the amateur who is not convinced that beams are best. Covers all bands from 3.5mHz to 28mHz. with a VSWR of better than 1.2. Full 2kW pep rating. The massive aluminium wire dipoles supplied ensure fantastic efficiency.
$39.75 p&p $2.00 Note: Requires BL–50A Balun for 52 ohm operation.

HAM HIGH QUALITY LOW NOISE FET RF AMP MODULES
These units are designed to be simply connected between the aerial and receiver of any 10, 6, or 2 metre unit. You can even mount them right at the aerial if you require maximum performance. Input impedance 50-75 ohm, noise factor 5-6 db gain 20-30 db, operating voltage 9–12 VDC @ 15 MA, dimensions, 70mm x 30mm x 15mm. Fully wired & tested. Circuit supplied, only 4 connections required.

ERB–27 (CB)	27–29 mHz
ERB–6	50–54 mHz
ERB–2	144–146 mHz

$18.50 ea p&p 75c

GO ON – Hot up your rig with one of these!

NOTE large goods can be sent ROAD FREIGHT payable by you (ROAD FREIGHT ON) please nominate

HAM 6 & 2 METRE FET CRYSTAL LOCKED CONVERTERS
These beautiful little high performance low noise converters are supplied completely wired and tested with high stability crystal to give tuneable I.F. output on 28–30 mHz (use any communication receiver). Extremely stable and excellent specs: 50-75 ohm input. Noise factor 5db, gain 30 db, operating voltage 9-12 VDC @ 15 MA. Dimensions 70mm x 30mm x 15mm. Completely tested and pre-aligned. However tuned circuits may be simply re-peaked to top end of band if you wish to do so. Supplied complete with circuit.

EXC–6	50–52 mHz
EXC–2	144–146 mHz

$27.50 ea p&p 75c

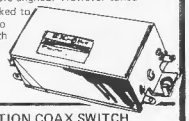

NON-INDUCTIVE 50 ohm LOAD RESISTORS
This type of resistor is normally found in high quality power meters selling for over $100.00. Both are high tolerance, high power devices with virtually no inductance. They are large (they have to be to dissipate the power). Ratings shown are continuous. Intermittant rating will obviously be far higher. Ideally suited for dummy loads or power meter applications.
50watt unit (20mm diam x 100mm long) $10.50
100watt unit (20mm diam x 200mm long) $19.75

Make your own power meter – save a Fortune

FAMOUS SHINWA RF. TVI FILTER 1003
This hand calibrated and adjusted low pass filter is supplied with a spec. sheet showing attenuation and VSWR for each individual unit. Typical attenuation is less than 1 db at 28 mHz and more than 25 db at 32 mHz. 52 ohm impedance and a power rating of 100W CW supplied complete with VHF sockets.
$19.75 p&p $1.00

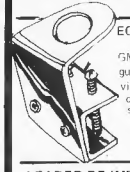

ECONOMY GUTTER MOUNT
GM–1 chrome plated gutter mount will take virtually any aerial – complete with mounting screws.
$2.75 p&p 75c

AMIDON TOROIDAL KILOWATT BALUN KIT
Make your own Balun with this beautiful American product. Supplied complete with massive 2" diam. Toroid, enamelled heavy gauge copper wire and explicit instructions to make 1:1 balun, 4:1 balun and matching to 36, 52, 72 & 600 ohms.
$12.00 p&p 75c

SW–3CO 3 POSITION COAX SWITCH
High quality gold plated contacts give a maximum rating of 1.5 kW, with an insertion loss of only 0.03db at 50mHz. Incredibly low VSWR, over 60 db isolation, operates up to 1000 mHz – a real micky mouse unit. Also features safety "pull to turn" systems which prevents "fiddlers" blowing things up.
$22.00 p&p $1.00

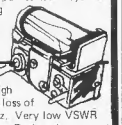

CXIIOP 12V COAX RELAY
Don't be misled by the price. This unit has high quality gold contacts which gives an insertion loss of less than 0.2 db up to 500 mHz. Very low VSWR and 1000 watt power rating. Designed to mount directly inside the smallest transceiver.
$9.75 p&p 75c

LEADER RF IMPEDANCE METER
At last, an accurate, calibrated impedance meter for aerial & transmission line work. Measures impedance from 0 ohm to 1K ohm with accurate markings at 50, 75 & 300 ohms. Frequency range 1.8–150 mHz. Simply use in conjunction with any RF signal source (G.P.O. sig. gen. transmitter etc.) for accurate impedance measurements. Operates from internal 9 volt battery (supplied). Dimensions 175H x 65W x 60D (mm). Supplied complete with 50 ohm calibration resistor and circuit.

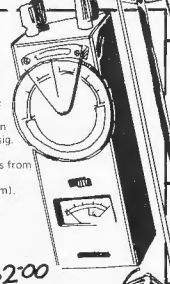

$72.50 p&p $2.00

RAK BL50A 50 ohm Balun (1 to 1 Ratio)
Enormous 4 kW maximum rating, fully weatherproof, 1.8 to 30mHz band width, VSWR 1.3 : 1 high 250kg tensile strength. VHF socket supplied.
$17.40 p&p 75c

AS–HOPE–2R MINIATURE 2 METRE HELICAL ANTENNA
This fantastic little antenna (under 9" long) screws into any VHF socket and then performs as well as a standard ¼ wave antenna. Ideal for mobile use where height is a problem and for walkie-talkie operation. Made of heavy duty fibre glass with chrome on brass mounting plug.
16.50 p&p 75c

KSA–2 FLEXIBLE 2 METRE ANTENNA
¼ wave long – designed especially for KEN KP202 but can be used with any 2 metre unit – aerial made from ¼" wide spring steel folds down to less than 4" high – ideal for bush use as it will not breek.
$10.50 p&p 75c

KATSUMI MC701 MICROPHONE COMPRESSOR
Yes – up to double your signal strength with very little loss in clarity with this F.E.T./IC compressor. Operates from 6 internal penlite cells and is designed with slim vertical look to mount beside equipment. Works by the principle of reducing audio peaks of voice modulation thus allowing a higher average level of audio to be used. Specs as follows: 1 x 1C (UPC 566H low noise compressor AMP) 1 x FET 2 x transistors, 2 x diodes. Compression level 25 db max fully variable, Mic impedance 100–50K ohms, distortion 1% or less, 10 db output. Freq. response 100–7 kHz ±2db (300– 3kHz with audio filter on) S/N ratio – 60 db. Power 9 volts @ 15 MA max Dimensions 50mm W x 170mm H x 110mm D.
Complete with circuit and instruction book.
$39.50 p&p $2.00 Batteries extra.

AIR DUX COILS
Now there's no excuse! You can easily make antenna loading units and high power linears with our high quality air dux coils. Each coil is separately boxed with an incredibly simple chart which shows at a glance the turns No/inductance/capacitance necessary for resonance at any frequency. If you would like a photo copy of these charts before buying, simply send 25c per chart and we will post them to you. All coils are 155mm long (6") and are bright tinned copper wire.

No.	Diam. (mm)	Wire Diam. (mm)	Pitch per Turn	Price
200816	20	0.8	1.6	$3.40
401016	40	1.0	1.6	$4.60
402042	40	2.0	4.2	$4.95
602042	60	2.0	4.2	$6.50

p&p 75c

TANY TRS–2 2 METRE ANTENNA – BARGAIN PRICED
This fantastic 144–148 mHz antenna is supplied complete with deep chromed gutter mount bracket (saves drilling holes in your car), over 4 metres of 52 ohm low loss flexible coax cable, PL259 plug and stainless steel whip which is easy to disconnect from the gutter mount.

Why pay over $20? when the TRS-2 is only $10.50 p&p $1

SPECIAL NI-CAD BATTERIES
Standard Pen-Lite Cell size & RECHARGABLE!
Normally $2.25 ea
Now $1.75 ea
or 10 for $15.00 (gives 12 Volts)

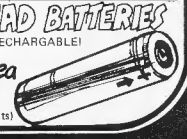

DICK SMITH ELECTRONICS CENTRE

Head Office & Mail Orders
P&P 50c min

160-162 Pacific Hwy
Gore Hill N.S.W. 2065
tel: 439 5311

Also at CITY 125 York St
tel: 29 1126

BANKSTOWN
361 Hume Hwy
tel: 709 6600

Telex No: AA20036 Cables: DIKSMIT Sydney

BENCH POWER SUPPLY

Moorabbin & District Radio Club VK3APC
P.O. Box 88, East Bentleigh, Vic. 3165

Described in the following article is a low voltage power supply. No doubt you have seen many power supplies published in this and other magazines, but this particular supply should capture your interest even if you only require some of its features.

The power supply presented here is fully variable in both voltage and current modes from 0 to 15 volts and 0 to 10 amps. It may be used either as a voltage source or a current source and is metered with two 3½" meters.

Regulation and ripple rejection are both excellent and, in fact, put this supply into the laboratory quality class as can be seen in the specification table.

SUPPLY SPECIFICATIONS

Line Regulation: 0.01% for 10% mains change
Load Regulation: 0.03% for any load addition or removal
Ripple Rejection: Better than 76 dB
Metering: Two meters 3" x 3½"
— voltage 0-1 mA FSD calibrated 0-15V FSD
— current 0-1 mA FSD calibrated in two ranges 0-1 AMP FSD 0-10 AMP FSD

OPERATION

Constant Voltage: Output continuously variable 0-15V
Constant Current Mode: Output continuously variable in 2 ranges 0-1 AMP and 0-10 AMP
Voltage Sensing: Selective on front panel for local or remote voltage sense
Temperature: up to 50 deg.C for full output.

You may ask, why go to the trouble of providing these high specifications for amateur use? These features are actually a bonus from the prudent use of integrated circuits and modern design used in this supply.

The supply has been designed to cover applications such as charging single cells or complete batteries, powering logic circuits covering 3.6V, 5V or 7 volt rails, zero derived voltage powered equipment such as 9V, 10V and 15V and mobile/portable equipment such as 4.5V, 6 to 7V, 9V, 12-14 volts.

It can be used as a general bench supply powering portable/mobile equipment, but more importantly it can be used in powering equipment where rigid voltage and current control is required (e.g. newly constructed transmitter / transceiver or faulty existing gear — solid state SSTV etc.), or the power supply current can be set to limit at a pre-determined level, thus alleviating possible equipment damage due to short circuits, incorrect terminations or poor tuning up. How many times have you discovered that a fuse has been protected by the circuit it was meant to protect? And when that rig is tuned up you can set the current limit just above normal operating current, thereby protecting the rig during use. Another use is recharging of batteries where the current can be set to give constant current charge with the supply closing down when the battery reaches the set potential, e.g. nickel cadmium etc.

The heart of the power supply is an integrated circuit precision voltage regulator type uA723C. This integrated circuit contains a voltage reference amplifier, an error amplifier, a series pass transistor and a current limiter.

It can be seen that by adding external connections as shown in Fig 2 that we have a regulated supply. The reference voltage is fed to the error detector non-inverting terminal and causes the error amplifier output to rise. This in turn causes the series pass transistor emitter to rise and thus voltage is fed back into the inverting terminal of the error amplifier. When the two inputs into the error amplifier are equal, there will be no change in output voltage. The nominal reference voltage from the reference amplifier is 7.15 volts and hence we would have a regulated 7 volt power supply.

It should now be realised that if we were able to vary the reference voltage (a potentiometer connected across the output of the reference amplifier) to the error amplifier then we would have a variable output voltage which would follow the preset voltage.

Referring now to the schematic, the power supply's operation will be discussed in detail.

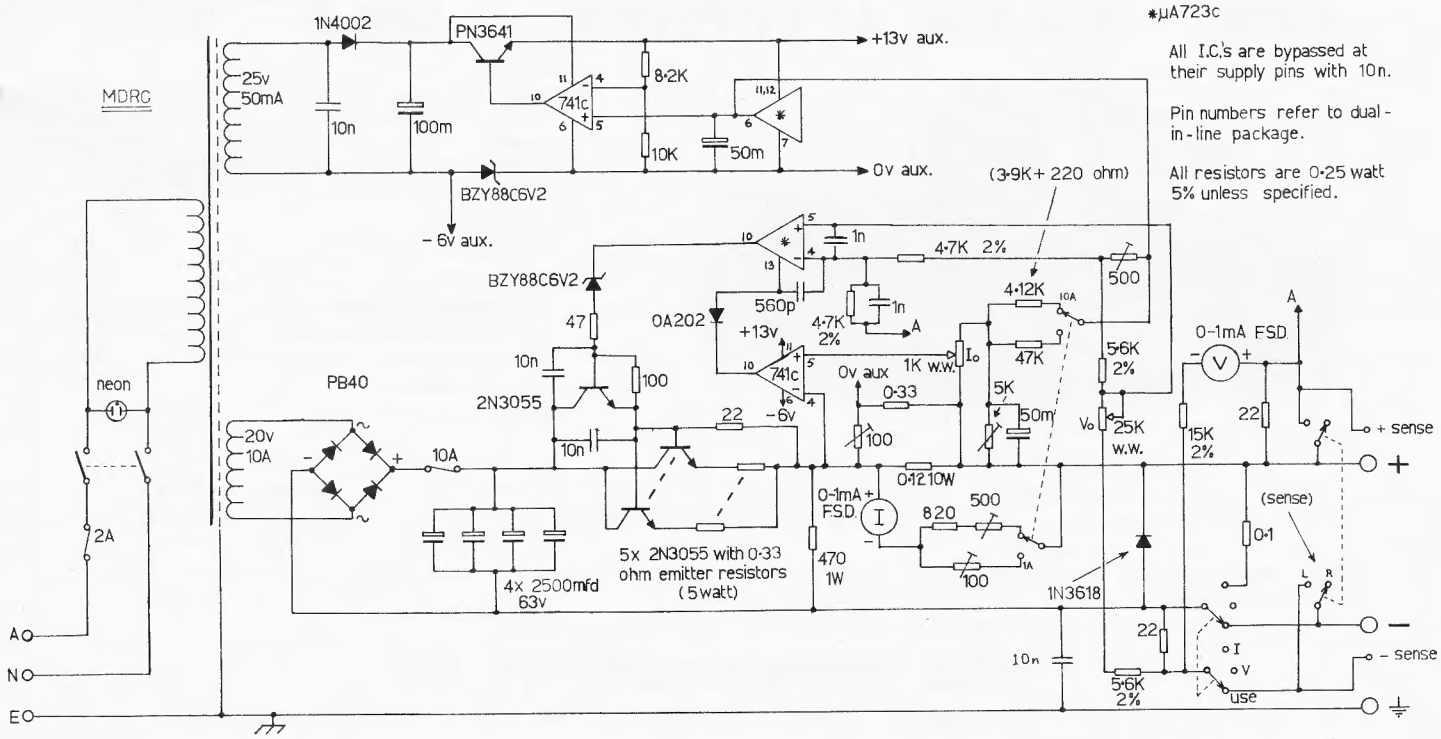

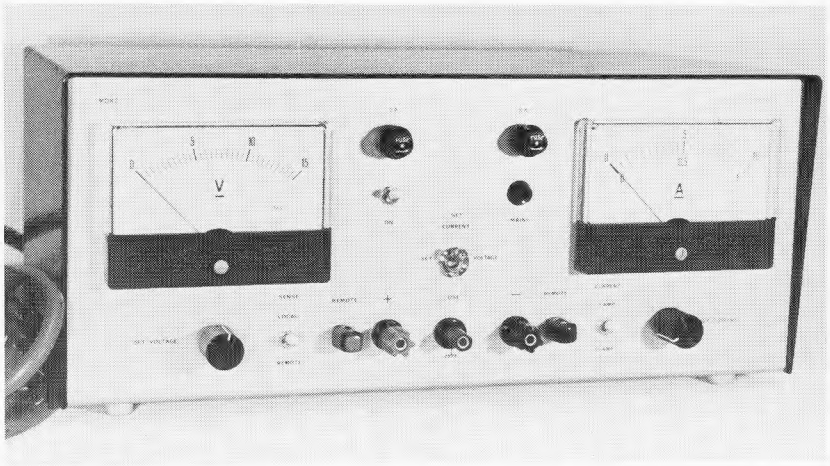

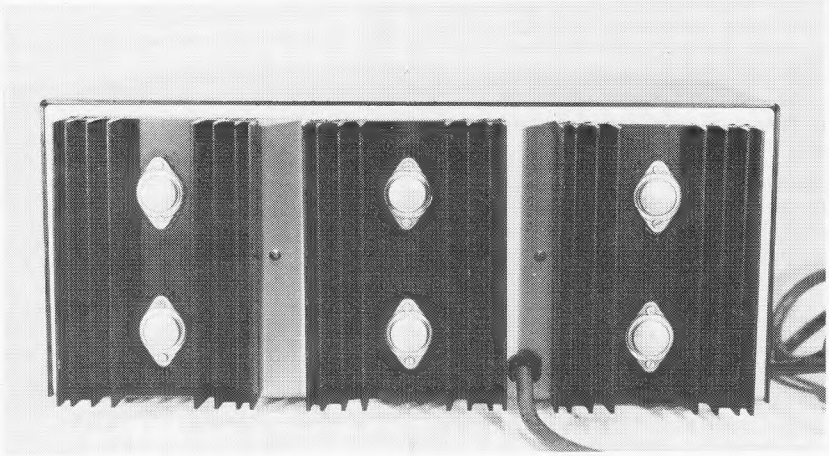

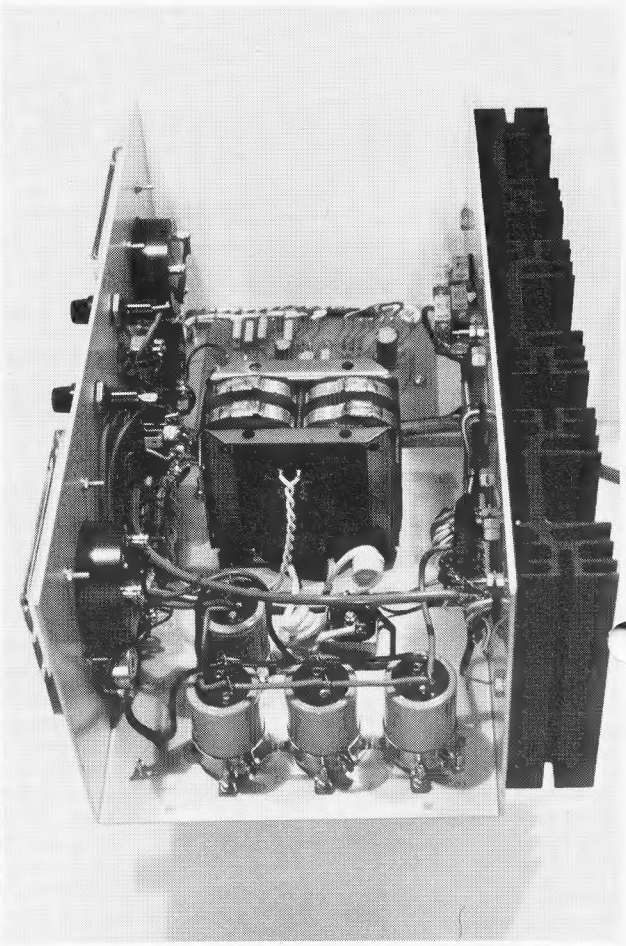

PRICE BREAKTHROUGH ON AUSTRALIAN-MADE UHF FM TRANSCEIVER BY

WILLIS COMMUNICATIONS PTY. LTD.

$220 WILLIS AUTOPHONE U 432-5 $220

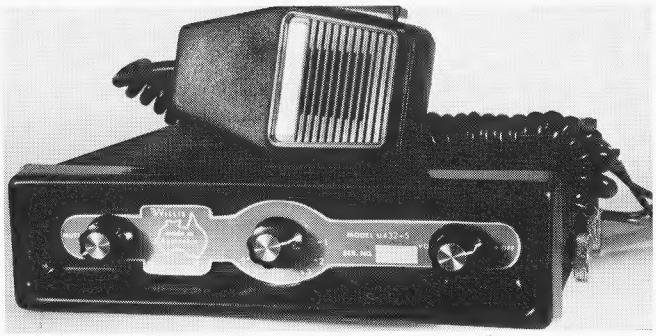

Price includes microphone, 1 set of high quality Australian made crystals (State preference, 436.5 or 435 MHz when ordering, other frequencies 2 weeks delivery) and 90-day factory warranty. **PRICE: $220**

OPTIONS:

6 channel kit	**$8**
12 channel kit	**$20**
6 channels, factory wired	**$20**
12 channels, factory wired	**$40**
10 watt version	**$40**
25 watt version	**$70**
Chrome mounting kit	**$10**

SPECIFICATIONS:

RF Power Output:	5 watts (min)	**Weight:**	3.2kg
Power Requirement:	13.8V DC, 2A (max) — (negative ground)	**Width:**	19.6cm
Rx Sensitivity:	0.5 uV for 20 dB quieting typical, 0.7 uV max.	**Depth:**	20.2cm
		Height:	4.8cm

This 70cm transceiver is basically the same as the Willis commercial unit of which there are thousands operating mobile throughout Australia, it is not a cheap toy radio.

All prices include sales tax. Add $8.00 to cover packing, freight and insurance.

WILLIS COMMUNICATIONS PTY. LTD.

13 BISHOP STREET, KELVIN GROVE, Qld. 4059 Phone: (072) 56 8515

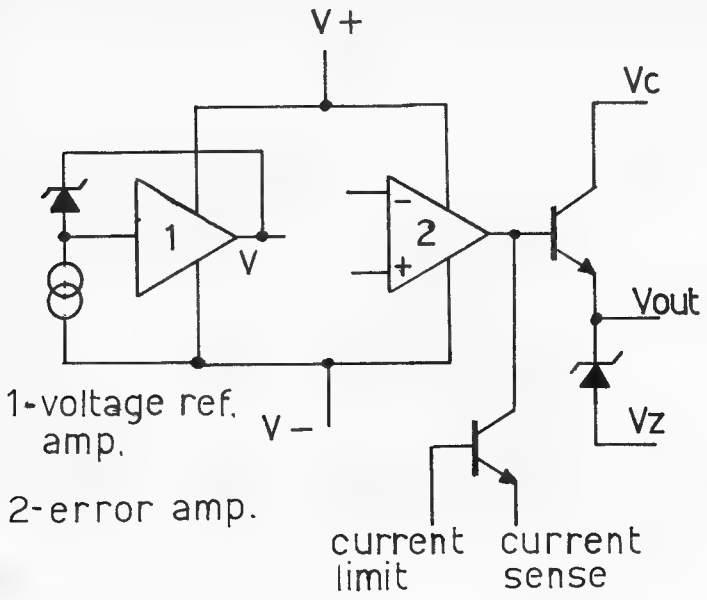

FIG. 1

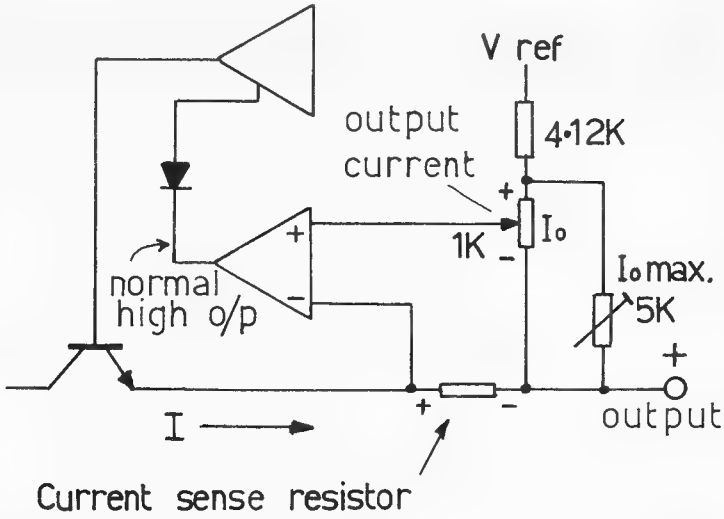

FIG. 4

The auxiliary circuit from the 25V winding is a constant voltage source, and the outputs are used as control voltages for the main regulator.

The auxiliary voltages are derived from a minor secondary winding of 25 volts at 50 mA. The AC is half-wave rectified and filtered by the 100 uF capacitor. This voltage is fed to the supply pins (V— and V+) of the uA723C integrated circuit. This in turn produces the reference voltage which is fed to the non-inverting terminal of the uA741C operational amplifier. This input causes the operational amplifier output to rise thus raising the emitter voltage of the PN3641 transistor.

The 8K2 and 10 k resistor divider cause the circuit to regulate at approximately 13 volts. Hence we have a +13 auxiliary supply with reference to the zero volt (0V) line. Also the insertion of a 6.2V zener diode as shown in the circuit allows us to derive a —6V auxiliary supply. These voltages +13V, reference volts and —6V are used as supply and control voltages for the power supply.

Fig 3 clearly shows the principle of operation for constant voltage control. The reference voltage is fed to two voltage divider networks. One divider is fixed (4K7 network), whilst the other is variable (5K6 network with 25 k potentiometer). When the "rheostat connected" potentiometer is at zero resistance, the error amplifier will only see equal input voltages when the voltage across the power supply positive and negative terminal is zero. By adjusting the 25 k potentiometer away from zero, the input to the error amplifier is no longer balanced and the output rises causing the series pass transistor to rise, thereby producing voltage across the power supply positive and negative terminals.

This in turn biases the 4K7 divider and equilibrium is reached when the error amplifier sees equal input voltages. Hence we have a regulated supply available from the supply terminals.

Fig 4 clearly shows operation for constant current control.

The reference voltage is divided to approximately 1V across the 1 k potentiometer. This is fed to a uA741C operational amplifier and causes the output to remain high. As load current flows, a potential is developed across the 0.1 ohm current sensing resistor. If this potential exceeds the input from the 1 k potentiometer, the operational amplifier output falls and closes down the uA723C regulator via the 0A202 diode. This gives good cut-off characteristics and network switching allows two continuously variable ranges of current control.

Remote sensing is provided and can be used when required. When the load is distant from the power supply terminals. small twin flex can be run from the load back to the supply terminals and remote sensing used to keep load voltage constant under varying load currents.

Monitoring of load voltage and current is carried out by two 0-1 mA FSD meters. The 15 k resistor gives 0-15V FSD and use of the current sensing resistor does away with shunts for measuring current. The current limit switch gives FSD meter indications 0-1 and 0-10 amps.

A "centre-off" DPDT switch enables current and voltage to be set up before applying the load.

The series pass elements are a 2N3055 driver stage controlling five 2N3055s in parallel.

The five 2N3055s are necessary due to the large dissipation evident under conditions of high load current at low to virtually zero output voltage. Each parallel 2N3055 transistor has a current sharing resistor to prevent thermal destruction.

The driver and parallel transistors are mounted two each on three 6 inch pieces of "MINIFIN" — 002.

If you are interested in building this supply, it is highly desirable to obtain the Printed Circuit Board which has been designed so that control circuits are not influenced by small potential drops occurring under high load currents. If these potentials were developed in control circuits, then regulation would be lost.

To make construction of this supply as simple and economical as possible, the Moorabbin and District Radio Club has available a complete kit of parts. This kit includes all items down to the last nut and bolt, and instructions.

Enquiries may be made to the Secretary: P.O. Box 88, East Bentleigh, 3165. ■

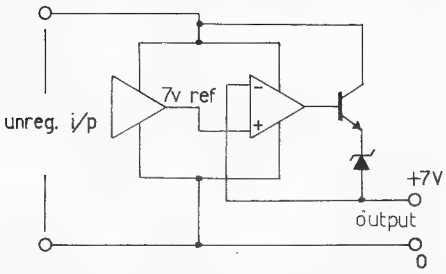

FIG. 2

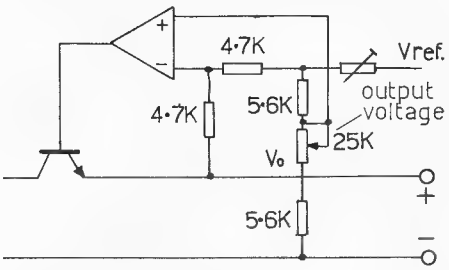

FIG. 3

VICOM INTERNATIONAL PTY LIMITED Manager: Peter Williams

12 month warranty* on all ICOM TRANSCEIVERS!

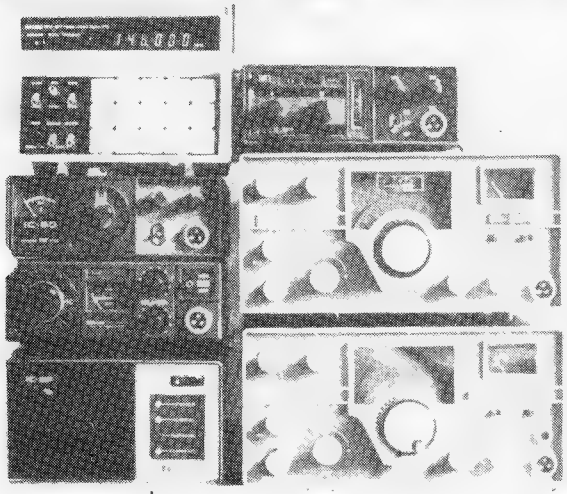

* warranty excludes final transistors and damage caused by user negligence.

Model:		IC-60	IC-22A	IC-21A
General				
Numbers of Semi-Conductors Employed:				
Transistors		32	22	42
F.E.T.		4	4	4
IC		1	3	—
Diodes		20	16	37
Power Source:	(Negative Ground)	13.5V±20%	13.5V ± 15%	240V ± 10%/13.8V ± 15%
Current Drain:	Transmit HI-10W	2.1A	2.1A	2.4A
	Transmit LO-1W	1.2A	1.2A	1.2A
	Receive at Peaking	350mA	350mA	600mA
	Receive Average	150mA	130mA	300mA
Antenna Input:		50 ohms	50 ohms	50 ohms
Dimension: H x W x D in mm		58 x 156 x 216	58 x 156 x 216	111 x 230 x 260
Net Weight:		2 kgs	2.1 kgs	6 kgs
Transmitter				
Frequency Range: MHz		50-54	144-148	146-148
Band Spacing:		1 MHz	2 MHz	2 MHz
Channels: Crystal Controlled		12	22	24
RF Output Power: Switchable		10W as HI (high) and 1W as LO (low)		variable 0.5-10W
Mode: (Phone by FM)		F3	F3	F3
Max. Frequency Deviation:		±5-15KHz	±5-15KHz	± 5-15 KHz
Modulation System:		Variable Reactance Phase Modulation		
Multiplication:		2 x 2 x 2	2 x 2 x 2	2 x 2 x 2
Spurious Radiation:		-60dB or less	-60dB or less	-60dB or less
Microphone: Dynamic P.T.T.		10 K/ohms	500 ohms	500 ohms
Receiver				
Frequency Range: MHz		50-54	144-148	144-148
Band Spacing:		2 MHz	4 MHz	4 MHz
Mode: (Phone by FM)		F3	F3	F3
Receiving System:		Double Super Heterodyne System		
IF: 1st MHz, 2nd KHz		10.7 & 455	10.7 & 455	10.7 and 455
Sensitivity:		a. Better than 0.4 uV at 20 dB quieting b. S+N/N at 1uV input, 30 dB or more		
Spurious Response:			-60dB or less	-60db or less
Band Width:		a. ±8/±15KHz at -6 dB point b. ±16/±25KHz at -50 dB point		
Squelch Sensitivity:		-8 dB	-8 dB	
Audio Output: 8 ohm		1.5W	1.5W	1.5W

DV-21 PLL DIGITAL VFO *

DV-21 DIGITAL VFO employs a PLL synthesised system with 59 ICs, 34 transistors, 1 FET and 37 diodes. It can be INTERFACED with the IC22A or any 2m transceiver with 44-45 MHz rx: 18 MHz tx, 10.7 MHz i.f., lwr side hetrodyne, 8 x basic freq. for tx and 3 or 9 x basic freq. for rx. Only a slight modification is required for such equipment and is detailed in the operating manual. It operates in 5 or 10 KHz steps from 146 to 148 MHz and can scan either empty frequencies, or the frequencies being used, whichever you select. Complete separate selection of the transmit and receive frequencies is as simple as touching the keys. When you transmit, bright easy to read LEDs display your frequency. Release the mic switch and the receive frequency is displayed. These are two programmable memories for your favorite frequencies. You won't believe the features and versatility of the DV-21 until you've tried it.

Stability: Better than ±2 x 10^{-5}
Power: 230 VAC ±10%
13.8 VDC ±15% at 1.5A
Output: 400mV (no load)
Spurious: Better than -60dB
Size: 111 x 161 x 261 mm
Weight: 2.5 kg

PRICE: $285

* 2 METRES fM

IC-22A complete with 6 channels!

Features:
* Solid-State T/R relay
* PA protection
* 5 helical resonators
* 12 month warranty

Complete with cables, bracket, mic
Extra channels $8.50 pair.
PRICE: $210 plus freight
Package deal with DV-21 $450

IC 21A

Features:
* built-in ac/dc supply
* DISC/SWR/power meter included
* adjustable power output and deviation controls
* built in calibration
* 12 months warranty

Complete with cables, mic etc and 3 channels 1/4/50.
Extra channels $8.50 pair.
PRICE: $298 plus freight
Package deal with DV 21 $570

6M SSB IC 501

Features:
* 50-54 MHz SSB/AM/CW
* PLL VFO
* 10 Watts
* Xtal filters for AM/CW
* AC or DC operation
* size 111 x 230 x 260 mm

PRICE: $445 plus freight

ICOM

IC-3PA

13.8v power supply for IC22A/IC60

PRICE: $78

CRYSTALS

WIA Band Plan Xtals for Icom transceivers $8.50 pr + 50c P & P

Head Office .... 139 AUBURN RD. AUBURN, VIC 3123. 82-5398

VICOM INTERNATIONAL PTY LIMITED Manager: Peter Williams

HF TRANSCEIVERS

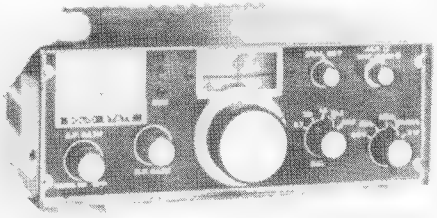

5 Bands, 200 Watts Input

Atlas 210-215 solid-state transceiver,	$570
Atlas 240V power supply,	$150
Atlas delux mobile mounting bracket,	$47

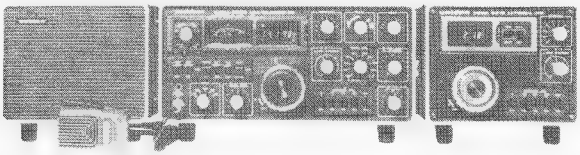

Uniden 2020 (80-10m) transceiver,	$550 incl. mic.
Uniden External (PLL) VFO	$105
Uniden Matching Speaker	$28
Yaesu FT101B (160-10m) transceiver.	$585
Yaesu FV101B VFO for FT101B/E.	$102
Yaesu FT101E (160-10m) transceiver.	$628
Yaesu FL2100B Linear Amplifier.	$388

Yaesu FT75B mobile transceiver, $245 AC power supply $50
DC power supply $60

Yaesu FT201 transceiver incl. pwr. supply,	$505
Trio TS-520 (80-10m) transceiver,	$550 incl. mic.

2 METRES SSB

SSM-EUROPA B transverter $224
YAESU FT220 ssb-cw-fm solid state transceiver. incl. mod to use fm repeaters.
TRIO TV-502 transverter $243.

Price of $445
SPECIAL

2 METRES FM

KEN KP202 handheld 2 watts. Incls 4 chs (1-4-40-50), $150.
TRIO TR2200G handheld portable transceiver incl. 2 chs, 1-50, $150. SPECIAL $130
SEWIA SV-230 mobile rig, runs 25 watts! Price: $210, includes 3 channels, mic, cables and mobile mounting bracket.

SPECIAL

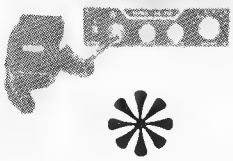

The Seiwa SU–710 70cm fm transceiver runs 10 watts and is the ideal mobile rig. Complete with 1 channel (435.0) and mounting bracket, mic, cables etc. and VICOM 90 day warranty. Price ~~$278~~. $260

PROFESSIONAL QUALITY 2M FM RECEIVER MODULE . . . Ideal as an auxiliary monitor for the shack or to keep the XYL posted (perhaps not a good idea!), this kit comes complete with a single channel oscillator and a premium grade 11 element if ladder filter. The price of $69.50 includes predrilled fibreglass pcb, all components, if crystal, filter, instruction manual. Add $1 P & P. **$69.50**

ANT. ACCESSORIES

ME-UA UHF POWER METER $69
AS-GM gutter damps 2m $7.50
SH-7E lightning arrester $14.90
CO-AX 58u 45c per m
RB 2m mast amp (144-146 or 146-148) $32
Rotator – CDR ham II 240v $165.

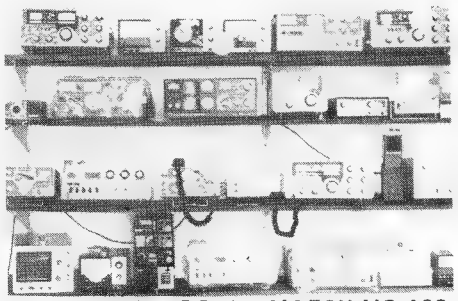

Vicom have made available a frequency counter in the front window of the Auburn showrooms to assist mobile 2M FM rig owners in staying on frequency. Come anytime and tune your rig while parked at the curb.

SEE IT ALL AT VICOM!

MONITOR SCOPE. The YAESU YO-100 monitor scope can be interfaced with most transceivers and can cover a wide range of modes incl. RTTY. A two tone built-in generator at 1500 and 1900 Hz adds to the versatility. Price: $190.
YAESU frequency counter $250. Covers up to 200MHz max. sensitivity 20mV, hi-lo input impedance.

ANTENNAE

MOBILE WHIPS:
RM-80 Resonator for 80m. $18.50
RM-40 Resonator for 40m. $16.80
RM-20 Resonator for 20m. $13.50
BM-1 Bumper mount $13. Spring $13.
HY–GAIN
203BA 3el 20m beam $168
TH6DX 6el yagi 10-15-20. $225
TH3JR 3el yagi 10-15-20. $135
18AVT trap vertical 80-10. $90
14AVQ trap vertical 40-10. $65
VHF ANTENNAE
LINDENOW 2m 5/8 whip $21, base $2.60.
RINGO ARX-2 6db 2m gamma matched vertical, $35.
Extension kit to improve gain of the old AR-2, $12.

SAFETY MIKE

MICROPHONE HEADSET for driving safety. $34

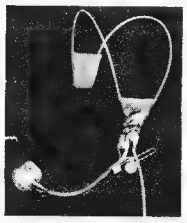

Vicom now have a range of suppression kits for the mobile enthusiast, including dc line filters, alternator and generator kits, ignition suppression kits and electroshield kits for the tough jobs.

Distributors

A.C.T.:	Andrew Davis, 32 Kalgoorlie Crescent, Fisher. Phone: (062) 88-4899.
QLD.:	DB Electronics, 21 Christine Ave., Miami. Phone: (075) 35-1798
S.A.:	Graham Stallard, 27 White Avenue, Lockleys. Phone: (08) 43-7981.
Geelong:	Phil Fitzherbert, Phone: (052) 43-6033.
Newcastle:	Digitronics, 188 Parry Street, Newcastle. Phone: (049) 69-2040.
W.A.:	Netronics, 388 Huntriss Avenue, Woodlands. Phone: (092) 46-3232.

Head Office . . . . 139 AUBURN RD. AUBURN, VIC 3123. 82-5398

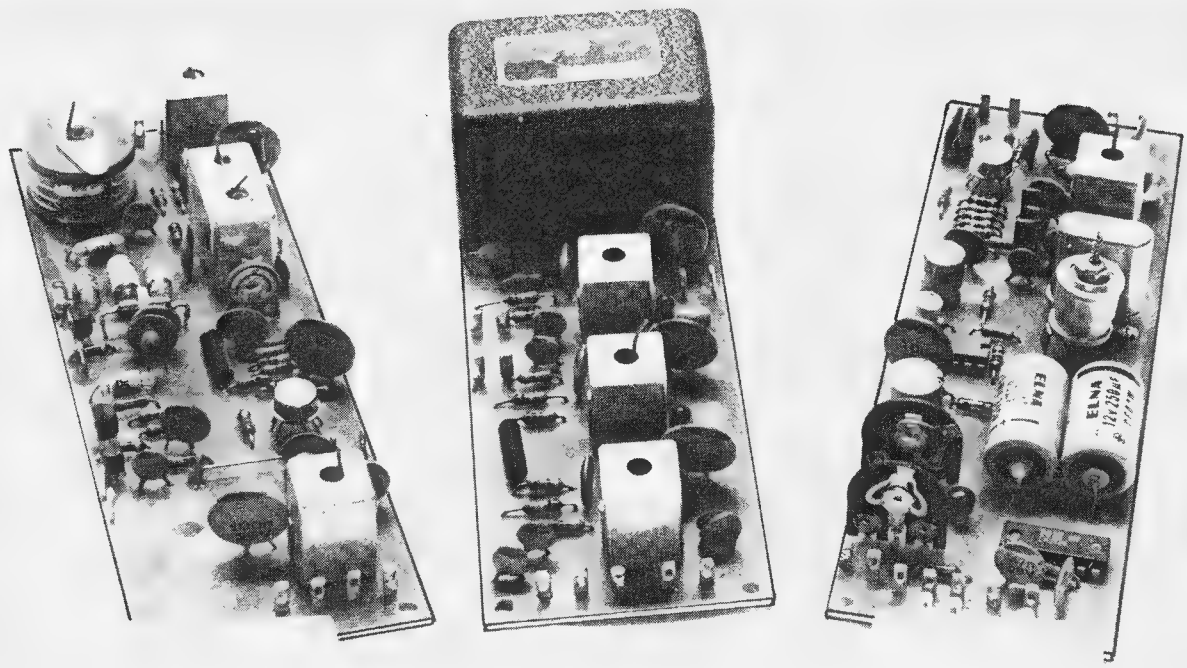

UNIT A UNIT B UNIT C

AMATEUR BUILDING BLOCKS

PART TWO

H. L. Hepburn VK3AFQ
4 Elizabeth St., East Brighton, 3187

Section 2—

DETAILED DESCRIPTION

In this section each of the modules, and the separate functions it contains, is described in detail. Circuit diagrams and component layouts are given as are the details for steering frequency determining circuits to the desired values.

2A — Unit A — RF AMPLIFIER/VFO/ MIXER/CRYSTAL OSCILLATOR

Figure 2 gives the circuit diagrams of the four on board functions while Figure 3 shows the placement of components on the board. Table 2.1 gives coil and capacitor data for the signal and IF circuits, Tables 2.3 and 2.4 detail the VFO tuned circuit constants while Table 2.5 gives representative coil data for the crystal oscillator.

(i) **The RF Amplifier**

The RF amplifier uses a dual gate protected MOSFET such as the Motorola MPF121, the Fairchild FTO501 or the RCA 40763 or any pin compatible electrical equivalent. Input is at low impedance via the link winding on L1, this latter coil being resonated by C1 for fixed tuning of narrow frequency ranges or by an external variable capacitor if a "peaking" facility is required or if a wide frequency coverage is sought.

Note that the *"cold"* (to RF) end of L1/C1 is returned to the source and not to earth as in the more conventional arrangements.

The source of the FET is maintained at a constant voltage of around 1.5V by using a light emitting diode as a low voltage zener. The gain of the stage is determined by the potential applied to gate 2 of the MOSFET.

With conventional biasing arrangements, using a decoupled source resister and/or resistive biasing of the gates, the voltage across the source resister falls as gain is reduced so that, even if gate 2 is connected directly to earth, there is still some residual gain because gate 2 cannot achieve a potential sufficiently negative with respect to the source to cut the stage off completely. This problem can be overcome by using a negative return rail for the gate biasing network but provision of such a negative voltage supply can be a problem if mobile work is contemplated. The arrangement used here is to fix the source voltage at approximately 1.5V by means of the LED/Zener so that if gate 2 potential is manually or automatically reduced to near ground potential there exists a sufficient differential between gate 2 and source to reduce stage gain to zero.

The gain control voltage can be obtained manually by means of a resistor and potentiometer across the main HT supply or automatically from the AGC generator described in Unit C, or combined as shown in Figure 6.

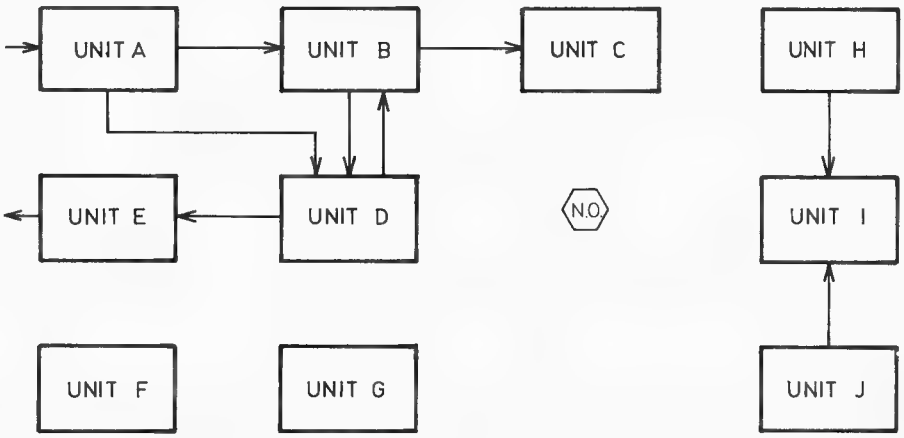

FIGURE 1 - BLOCK DIAGRAM OF MODULES

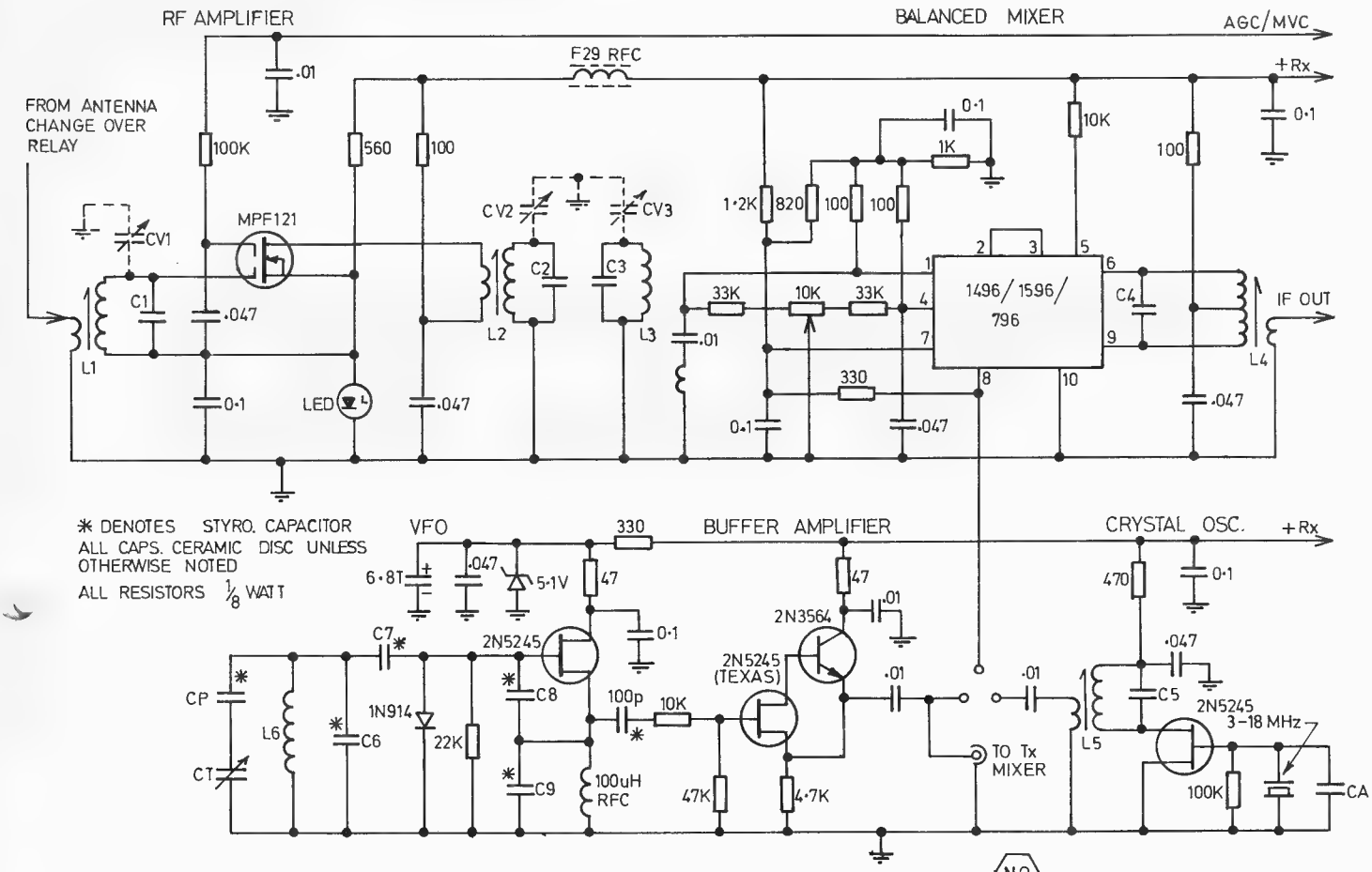

FIGURE 2 – UNIT A – CIRCUIT DIAGRAM

Since a dual gate MOSFET likes to see a low impedance drain load (it is only the gates which have high input impedance) link coupling is used to L2/C2. L2 is mutually coupled to L3/C3 and a further link on L3 provides the necessary low impedance output required by the signal ports of the balanced mixer.

(ii) **The Mixer**

The mixer is a Motorola 1496/1596 or its less costly Fairchild equivalent, the 796HC. Both are in TO5 10 pin packages. Other manufacturers market electrical equivalents that can be used provided they are pin compatible.

Oscillator feedthrough is minimal even with no variable balancing arrangement and there is no significant output at the fundamental of either input frequency. This characteristic makes for a clean, noise free output. The 10 k trimpot allows the device to be balanced for minimum oscillator feedthrough.

The output transformer L4 is bifiliar wound and is resonated by C4. A link wound over the centre of L4 provides a low impedance output.

As mentioned with respect to C1, both C2 and C3 can be wholly or partially replaced with an external variable capacitor if a "peaking" control is wanted or if a large signal frequency range is to be covered.

Coils L1, 2 and 3 are wound on Neosid 722/1 formers (obtainable from Neosid,

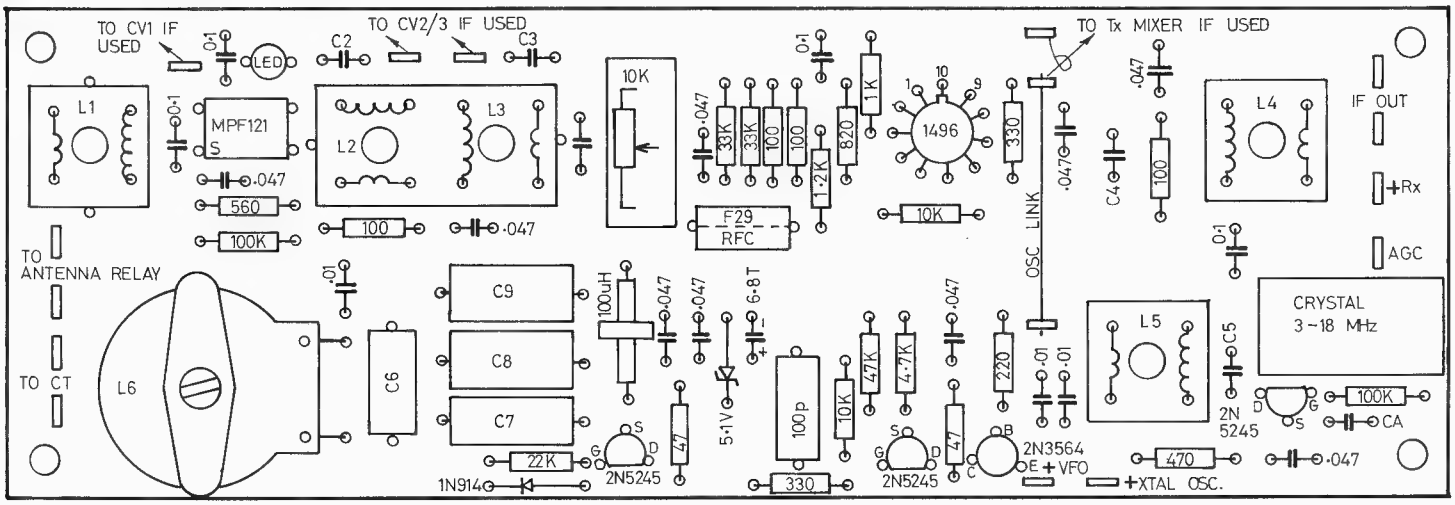

FIGURE 3 – UNIT A – COMPONENT LAYOUT

VK 2 AVA INTRODUCES THE OUTSTANDING

UNIDEN TRANSCEIVERS

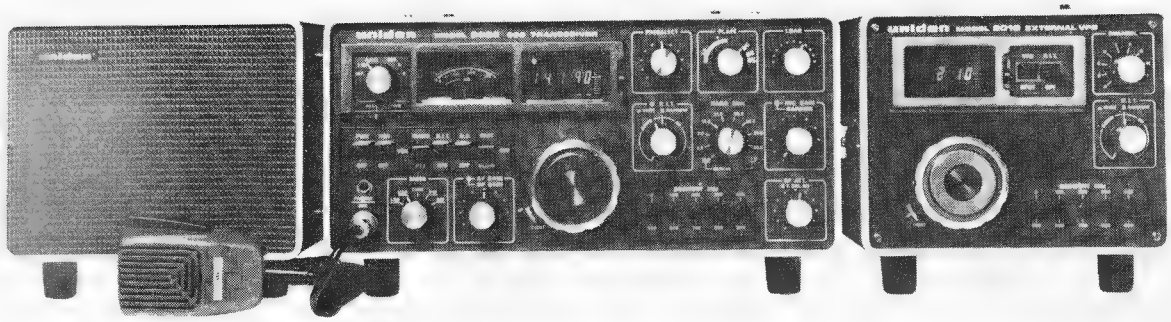

MODEL 8120 MODEL 2020 MODEL 8010

UNIDEN CORPORATION of JAPAN, an old established manufacturer of commercial communications equipment, has just entered the field of amateur transceivers and is introducing an all-band 80 to 10 M. coverage AC-DC transceiver with many novel features, amongst others:

PAIR of 6146-B tubes in the final stage with high voltage Zener diode, stabilizing the screen voltages to the 6146's, resulting in minimum distortion products and a very clean output signal.

SEPARATE USB and LSB and CW 8-pole crystal filters as standard and no frequency change when going from USB to LSB.

PHASED LOCK LOOP oscillator circuitry, maximum stability.

INDEPENDENT r.f. circuitry for transmitting and receiving, no compromise common circuits.

MAXIMUM accessability to plug-in PCB modules, even the front panel can be swung out for easy servicing should this be required.

CONTINUOUS RF attenuator with up to 70 db. maximum attenuation.

DUAL-RANGE R.I.T. control (clarifier) with either 5 KHz or 1 KHz plus and minus frequency control.

100 KHz VFO Range, with push-button selection of each 100 KHz frequency coverage.

Many more features, no front-end overloading on even the strongest signals, matching external VFO and speaker units available, in all combining the better things of competing products at a lower price.

Will be introduced during AUGUST, 1975, for just $550

All prices quoted are net SPRINGWOOD, N.S.W., cash with orders, sales tax included in all cases, subject to changes without prior notice. No terms nor credit nor COD facilities, only cash and carry, no exceptions. All-risk insurance available for 50 cents per $100 value, minimum insurance charge 50 cents. Allow for freight, postage or carriage, excess will be promptly refunded. — MARY & ARIE BLES, Proprietors.

SIDEBAND ELECTRONICS SALES and ENGINEERING

P.O. BOX 23, SPRINGWOOD, N.S.W. Post Code 2777

TELEPHONE, **DURING BUSINESS HOURS ONLY!** STD 047 511-394

SIDEBAND ELECTRONICS SALES and ENGINEERING

UNIDEN

Model 2020 de-luxe all-band AC-DC transceivers	$550
External VFO model 8010 for the 2020	$100
External speaker for model 2020	$25

TRIO-KENWOOD

Model TS-900 de-luxe all-band transceivers, with PS-900 AC supply-speaker unit	$800
Model TS-520 AC-DC transceivers all-band	$530
Model TV-502 2 Mtr transvertor for TS-520	$200
QR-666 all-band coverage receiver 170 KHz-30 MHz	$300

YAESU-MUSEN

Latest model FT-101-E AC-DC transceivers with genuine RF clipper-speech processor	$650
Model FT-200 transceivers with FP-200 AC unit	$400
Model YC-355-D digital frequency counters 0-200 MHz	$250
SPECTRONICS DD-1 digital counter for FT-101-B-E	$150

All UNIDEN, TRIO-KENWOOD & YAESU MUSEN transceivers come complete with original English manuals, all crystals for all available bands and a P.T.T. dynamic microphone. Sorry, no more free S.W.R. Meters.

HY-GAIN ANTENNAS

14AVQ 10-40 M. verticals 19' tall, no guys	$65
18 AVT-WB 10-80 M. verticals, 23' tall, no guys	$90
TH 3 JR 10-15-20 M. junior 3 el Yagi 12' boom	$135
TH 3 Mk 3 10-15-20 M. senior 3 el. Yagi 14' boom	$180
TH 6 DXX 10-15-20 M. senior 6 el. Yagi 24' boom	$225
204 BA 20 M. monoband 4 el. TIGER YAGI 26' boom	$190
HY-QUAD 10-15-20 M. full size Cubical Quad	$200

CDR ANTENNA ROTATORS

AR 22 for 2 and 6 M. and small HF beams	$50
AR 20 for 2 and 6 M. beams	$40
HAM-II with re-designed control box	$150

All three models for 230 V AC complete with indicator-control units.

4-conductor light cable for AR-20-22	**20 cents per yard**
12-conductor light cable for HAM-II	**30 cents per yard**
8-conductor heavy duty cable for HAM-II	**60 cents per yard**

BARLOW-WADLEY RECEIVERS

Model XCR-30 Mk II 500 KHz to 31 MHz continuous coverage portable communications receivers, crystal controlled reception of AM-USB-LSB-CW **$275**

POWER OUTPUT METERS

Galaxy RF 550A with 6-position coax switch **$75**

S.W.R. METERS

Midland twin-meter model for 52 Ohms, up to 1 KW on HF **$22**

BALUNS

New Japanese model, 75 Ohms impedance 1 KW PEP **$10**

MARK MOBILE ANTENNAS

Helical 6' long	HW-40 for 40 M.	$18
	High power KW-40 for 40 M.	$25
	HW-20 for 2o M.	$16
	Tri-band HW-3 for 10-15-20 M.	$25
Swivel mobile mount & chrome plated spring for all		$12

ASAHI MOBILE ANTENNAS

Model AS-303A set of 5 whips 10 to 80 M. complete with ball spring and mount	$90
AS-2-DW-E ¼ wave 2 M. mobile whip	$8
AS-WW ⅝ wave 2 M. mobile whip	$15
AS-GM gutter clip mount with cable and connectors	$10
M-RING body mount and cap for 2 M. whips	$5

COAX CONNECTORS

VHF types PL-259, angle and T-connectors RCA male to SO 239 type female, all models **$1 each**

CUSH CRAFT ANTENNAS

Model DGPA 52 to 27 MHz adjustable ground plane	$25
LAC-2 lightning arrestors	$6
Model AR-2 RINGO ⅝ wave verticals	$20
AR-2X RINGO double ⅝ waves verticals	$35
ARX-2 extension for AR-2	$15
A147-20T combination vertical-horizontal 2 M. Yagis, 10 elements each	$60
A147-11 11 elements 2 M. Yagi	$30

CRYSTAL FILTERS

9 MHz similar to FT-200 ones, with carrier xtals **$35**

POWER SUPPLIES

240 V AC to 12V DC 3 A, regulated overload protected **$35**

FDK MULTI-7

2 M. FM transceivers, 10 W output, now with 12 Aussie channels crystals, 40 to 60, including channels 43 and 45 includes all repeaters and antin-repeater use, still **$225**

KEN PRODUCTS

KP-202 2 M. hand-held transceivers with 6 channels	$150
KCP-2 charger for KP-202 with 10 NICAD batteries	$35
Stubby flexible whip for KP 202	$6
KP-12A speech processor, self contained 240 V AC	$100

KLM ELECTRONICS

Solid state 12V DC 2 M. amplifier, 12W output, automatic antenna change-over when driven, ideal for mobile use with the KP-202 **$50**

NOVICE LICENSEES EQUIPMENT

5 W AM 23 channels 27 MHz transceivers with P.T.T. mike	$95
5 W AM 15 W SSB 23 channels transceivers with P.T.T. mike	$175

Dick Smith Electronics, WIA Components Committee and some supply houses) and use F16 or F29 self-locking tuning slugs. All coils use screening cans obtainable from the same sources.

L4 (at least at the higher IF frequencies) can also be wound on a Neosid former. However, at an IF of 455 kHz, the coil is a little difficult to wind and a standard 11 mm 455 kHz replacement type transistor broadcast transformer can be used instead. The PCB is laid to accommodate either type of coil.

If required, the RF stage and its associated components (including the 100 ohm HT decoupler and its associated 0.047 mfd capacitor) can be omitted. The drain end of the input link on L2 then becomes the antenna input and a wire across the two holes originally occupied by the 0.047 decoupling capacitor earths the other end of the link.

TABLE 2.1 — RF/MIXER COIL DATA

Freq. MHz	L1 - L5 Primary Turns	Link Turns	Wire Size A.W.G. En.	DIA. Ins.	Slug Type	C1-C5 pf
1.8	75	10	37	0.0045	F16	470
3.5	50	5	37	0.0045	F16	150
5.0	35	4	32	0.008	F16	150
7.0	30	3	32	0.008	F16	100
9.0	26	3	32	0.008	F16	100
10.7	20	3	32	0.008	F29	100
12.0	20	3	32	0.008	F29	82
14.0	20	3	32	0.008	F29	47
18.0	20	3	26	0.016	F29	47
21.0	20	3	26	0.016	F29	33
28.0	20	3	26	0.016	F29	15

Notes

(a) All coils close wound on Neosid 722/1 formers using specified American wire gauge (or closest SWG equivalent) enamelled wire.

(b) Links for L1, 2, 3 and 5 are wound over the "cold" or earthy end of the tuned winding.

(c) L4 is wound bifiliar. For example, at 9 MHz L4 is two 13 turn windings or 26 turns total. The link is wound over the centre of the tuned winding.

(d) L4 for 455 kHz can be a centre tapped 10 mm broadcast replacement IF transformer.

(iii) The VFO

Using single conversion places some restriction on the VFO if reasonable stability is to be achieved and intermediate hetrodyning of the VFO to a high injection frequency is to be avoided.

Using the Amateur bands as an example, the following VFO ranges will be required

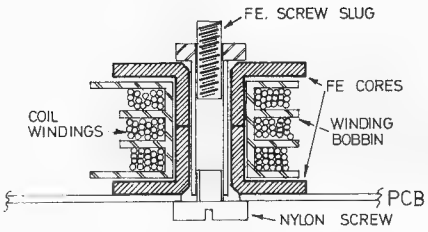

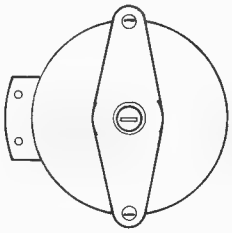

FIGURE 4
L6 COIL ASSEMBLY

for 160 metres through 15 metres at various IF frequencies.

TABLE 2.2

Band	Signal Frequencies MHz	I.F. MHz	VFO Frequency MHz
160	1.8-1.86	9.0	7.2-7.14
	,,	10.7	8.9-1.84
	,,	5.0	3.2-3.14
	,,	0.455	2.255-2.315
80	3.5-3.7	9.0	5.5-5.3
	,,	10.7	7.2-7.0
	,,	5.0	1.5-1.3
	,,	0.455	3.955-4.155
40	7.0-7.15	9.0	2.0-1.85
	,,	10.7	3.7-3.55
	,,	5.0	2.0-2.15
20	14.0-14.35	9.0	5.0-5.35
	,,	10.7	3.3-3.65
	,,	5.0	9.0-9.35
15	21.0-21.45	9.0	12.0-12.45
	,,	10.7	10.3-10.75*

*To be avoided

Thus, in order to give as wide a choice of signal and IF frequencies as possible, the VFO circuitry used must enable frequency segments to be selected in the range 1.3-12.5 MHz. The circuit adopted is given in Figure 2 and component layout in Figure 3. Note that capacitors used in the oscillator proper (C6-C9 and the 100 pF output coupling capacitor) are styroseals and are so marked on the circuit diagram. The FET oscillator is a 2N5245 and has its collector supply regulated at 5.0 volts. The FET/Bipolar buffer provides both isolation and a very low output impedance. The Texas Instruments 2N5245 was used but other HF fets can be substituted provided they are pin compatible. The writer has used MPF102s and 2N3819s in this circuit but the board layout is specific to the TI2N5245 or the MPF102.

The coil form used is a Neosid (23-25 Percival St., Lilyfield, NSW 2040) Type A1 assembly. This assembly consists of a three section plastic winding bobbin enclosed in two mushroom shaped powdered iron shrouds. The core and shrouds fit over a threaded nylon cylinder containing a powdered iron tuning slug. The whole assembly is held together and to the PCB with a nylon bolt. See Figure 4.

The tuning capacitor CT is a 100 pF (nominal) variable. Either the Eddystone Type 585 or Jackson Brothers Type C804/100 pF are very suitable and are stocked by William Willis (77 Canterbury Rd., Canterbury, Vic. 3126).

The capacitor swings required to cover the Amateur bands are given in Table 3 and a styroseal capacitor (CP) is used to restrict the tuning range to that required. Note that both tuning capacitor and series padding capacitor are not on the PCB but should be firmly mounted close to it and the inter-connects kept as short and stiff as possible.

Table 4 gives the VFO coverage to be expected using various coil windings and resonating capacitors. This data will be useful if either a wide signal frequency range or frequency segments other than the amateur bands are of interest.

(iv) The Crystal Oscillator

To increase the flexibility of Unit A, on board provision is made for a simple FET crystal oscillator. It uses fundamental mode parallel resonant crystals. The board layout allows for either Style D or Style K

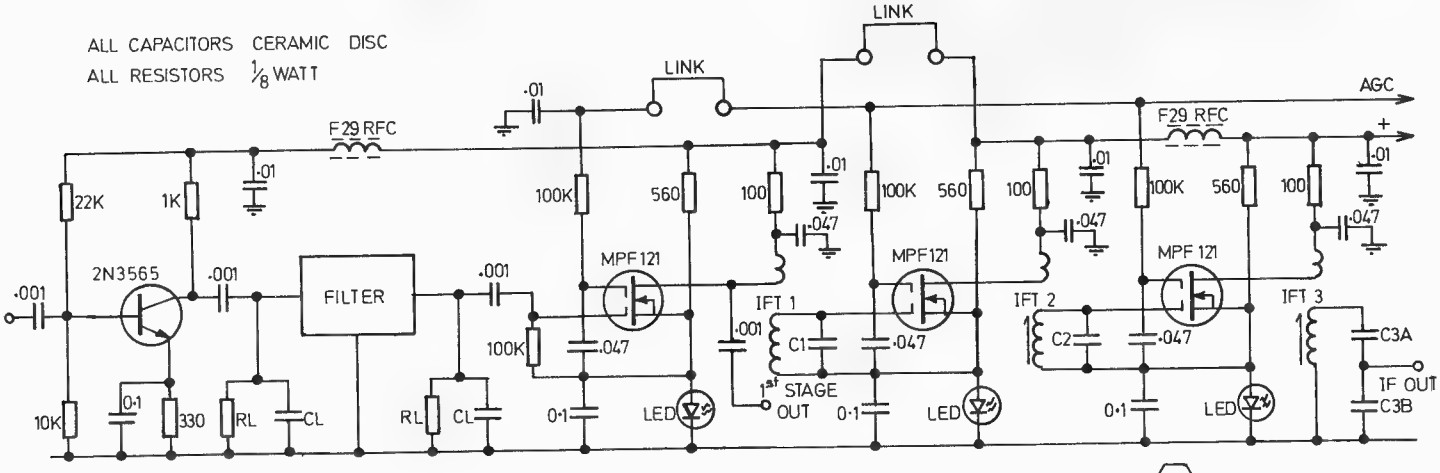

FIGURE 5 — UNIT B — IF FILTER AND AMPLIFIERS

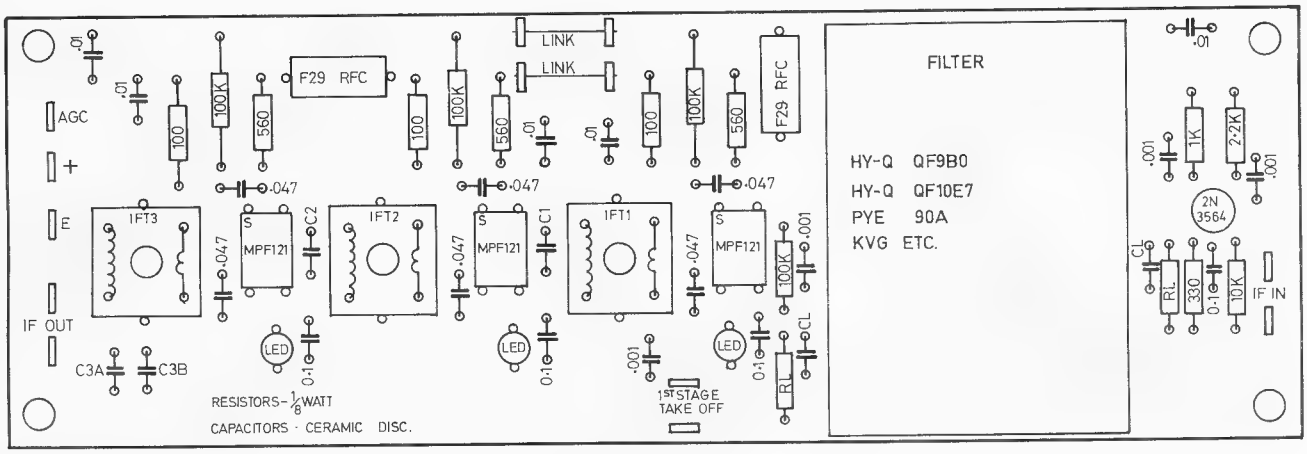

FIGURE 6 – UNIT B – COMPONENT LAYOUT

crystals and a fixed capacitor (CA) for fixed adjustment to the crystal frequency. CA may be replaced by a 3/30 pF trimmer for more precise adjustment of the crystal frequency if so desired.

L5 is resonated with C5 at the crystal frequency and the output link coupling uses, to the nearest turn, one eighth of the number of turns on the tuned winding. Representative coil/capacitor data is given in Table 2.5 below.

Having provision for a crystal oscillator means that the module can be used as an HF converter, the VFO not being used. Alternatively, both VFO and crystal oscillator can be used to provide tuned or fixed frequency operation of a receiver or transmitter. A third possibility is to use both VFO and crystal oscillator in Unit A, mix them together in the signal frequency mixer of Unit D (described later) to provide the higher injection frequencies needed to cover, say the 28 to 30 MHz band.

TABLE 2.5 — REPRESENTATIVE DATA FOR L5/C5

Crystal Frequency MHz	L5 Turns	AWG	Core	C5
3	30	32	F16	330
6	30	32	F16	150
9	26	32	F16	100
12	20	32	F29	100
18	20	26	F29	47

2B — Unit B — SSB/CW/AM IF AMPLIFIER

The circuit diagram is given in Figure 5 while the component layout is given in Figure 6. Table 2.6 gives coil data.

A 2N3564 input stage is used primarily to provide an impedance match to the input of the filter. The stage does give a voltage gain of 2 or 3 at 9 MHz and somewhat more at 455 kHz.

Output from the filter is amplified by a three stage discrete component amplifier using MPF121s or equivalent dual gate MOSFETS. The three stages are identical and are AGC controlled.

As in the case of the RF amplifier in Unit A, the sources are kept at a constant voltage by using a LED as a low voltage zener and the signal gate returns being made to source and not directly to earth. Since this system allows stage gain to be reduced to zero by taking gate 2 to near earth potential, the AGC action is very much enhanced and is known to be in excess of 120 dB.

An offtake is provided from the drain of the first MPF121 to allow a double sideband signal from a balanced modulator to be amplified and stripped of one sideband before passing to a subsequent mixer to produce a signal frequency SSB output. Suggested off board switching to do this is given in Figure 4.

The PCB is laid out so that most of the popular filters on 5.0, 9.0 or 10.7 MHz can be used. The Hy Q filters type QF9BO (9 MHz) or QF10E7 (10.7 MHz) are available from their Australian makers at 10-12 Rosella St., Frankston, Vic. 3199 or their interstate agents. The board will also accept the KVG range of filters which are advertised in local journals as being available from overseas. Other filters such as the (now discontinued) Pye 90A will also fit the PCB but the Collins 455 kHz range of mechanical filters are too long to fit the board unless mounted vertically.

The two resistors marked RL and the two capacitors marked CL are normally specified by the supplier. The HyQ QF9BO requires terminating impedances of 500 ohms and 30 pF. The 1000 ohm collector load of the 2N3564 first stage is effectively in parallel with the input of the filter so that the actual value of RL put on the board will be 1000 ohms and CL will be 30 pF minus circuit strays or say 22 pF. The output CL will also be 22 pF but the output RL will be 650 ohms. Other terminating R and C values can be established bearing these points in mind. If a 455 kHz Collins mechanical filter is used both input and output CL will be 120 pF, no output RL will be needed and the input RL will have to be put IN SERIES with the 1000 pF coupling capacitor and not between filter input and earth.

For 5.0, 9.0 and 10.7 MHz IFs the interstage transformers may be wound on Neosid 722/1 forms. Coil and capacitor data is given in Table 2.6. For a 455 kHz strip, use may be made of either 7 mm or 11 mm replacement type transistor broadcast transformers. Those having a low impedance output link (i.e., white or yellow codes) are suitable. The PCB is laid to accept all three coil types.

If a commercial unit on 455 kHz is used for IFT 3 then it will have to be modified by removing its internal resonating capaci-

TABLE 2.3 — VFO CONSTANTS FOR AMATEUR BANDS

Band	Signal Freq. MHz	IF MHz	VFO Freq. MHz	L6 Turns	AWG	CT	Capacitance in pF CP	C6	C7	C8	C9
160	1.80-1.86	9.0	7.2-7.14	9	22	100	22	120	100	680	330
80	3.50-3.70	9.0	5.5-5.3	9	22	100	33	270	100	680	330
40	7.00-7.15	9.0	2.0-1.85	24	22	100	330	150	330	1000	1000
20	14.00-14.35	9.0	5.0-5.35	9	22	100	150	270	100	680	330
15	21.00-21.45	9.0	12.0-12.45	6	22	100	33	100	100	330	180

TABLE 2.4 — VFO CONSTANTS FOR WIDE TUNING RANGES

VFO Frequency Coverage MHz	L6 No. Turns	AWG	CT (Roblan)	Capacitance in pF CP	C6	C7	C8	C9
1.5-2.4	24	22	10-415	Nil	47	330	1000	1000
2.0-3.3	18	22	10-415	Nil	47	330	1000	1000
3.1-4.8	12	22	10-415	Nil	47	330	1000	1000
4.3-8.5	9	22	10-415	Nil	47	100	680	330
6.5-14.0	6	22	10-415	Nil	47	100	330	180

Notes

(1) Coil turns equally distributed in all three coil former sections.
(2) For wide band tuning C6 can conviently be a 60 pF trimmer.
(3) Coil inductance adjustment allows correction for normal capacitor tolerances.

The value-packed commercial quality PFT-203 TRANSCEIVER for 2 m FM

25 CHANNELS 30 WATT

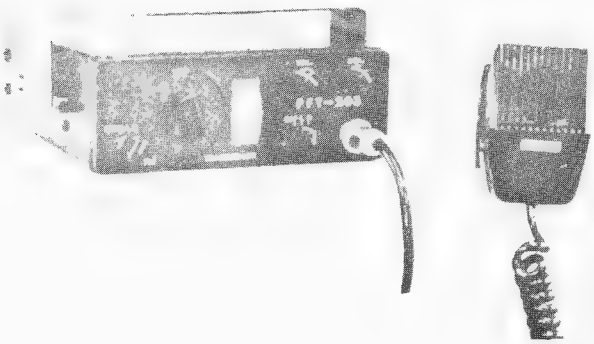

The model PFT-203, originally designed for marine use in America, is a 30 watt plus, 25 channel mobile FM transceiver for the 2m amateur band. It is compactly housed in a metal cabinet of attractive appearance. The IF amp. frequencies are 10.7 MHz and 455 kHz, clear of HF amateur bands to reduce interference to a minimum. Excellent selectivity is assured by the use of a 2 pole crystal filter and three ceramic filters! A low pass filter is included in the antenna circuit for both transmit and receive.
Incorporates power level adjustment and automatic SWR protection which does not cut the transmission on high SWR but reduces power according to SWR deficiency. Thus you can still transmit even with a relatively poor SWR . . . good for emergency, etc. situations.
The use of a large area heat sink and PA transistor with power dissipation of 70W help to ensure trouble-free operation under arduous conditions. One channel provides priority "call-channel" operation. Enables you to flick over to your favourite pre-determined Channel without altering the main channel selector switch.

TECHNICAL DATA OF PFT-203

GENERAL

Frequency Coverage	140-170 MHz, factory adjusted to the 2m band
Number of Channels	24 Channels plus 1 memory channel
Maximum Bandwidth per Unit	2 MHz
Mode	F3 (Phase Modulation)
Power Source	13.5V DC (±10%) Negative Ground
Power Drain	Receive 0.3A Transmit 5.0A/25W 1.2A/ 1W
Operating Temperature	—20°C to +55°C
Antenna Impedance	50 ohms
Microphone	Dynamic 500 ohms
Dimensions	61 mm (H) x 166 mm (W) x 215 mm (D) or 2⅜" x 6½" x 8 7/16"
Weight	2.2 Kgs or 4.8 lbs.

TRANSMITTER

Power Output	30 Watts or 1 Watt, switchable (max.)
Modulation	Variable capacitance phase modulation
Multiplications	12 Times
Frequency Deviation	12.5 kHz max. (adjustable)
Harmonics Spurious Radiation	2μW or less
Adj. Chann. Radiation	2μW or less
Frequency Stability	Not exceeding ±0.001% (—20°C to +60°C)
Mod. AF Response	0.3 to 3 kHz +6dB/Octave

RECEIVER

Receiving System	Crystal controlled double superheterodyne
Frequency Stability	Not exceeding ±0.001% (—20°C to +60°C)
Intermediate Frequency	1st IF : 10.7 MHz 2nd IF : 455 kHz
Sensitivity	0.5 μV or less at 20 dB QS
Selectivity	±10 kHz at —6dB, ±20 kHz at —80dB
Spurious Response	Greater than 60 dB
Spurious Radiation	0.002 μW or less
Intermodulation	At least 75 dB down at ±25 kHz separation
Audio Output	1 Watt (less than 10% distortion)

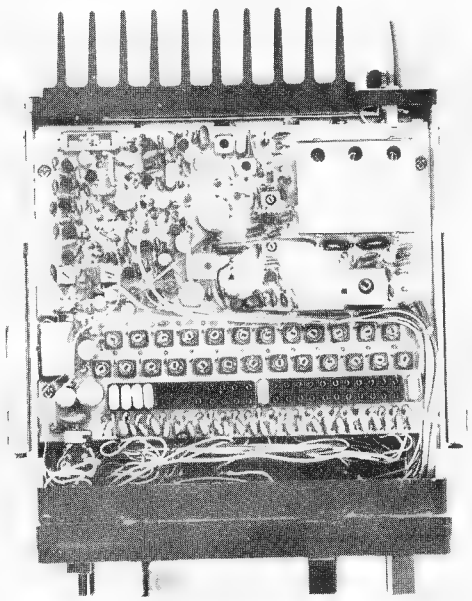

FURTHER STOCKS ARRIVING. Comprehensive range of spares in stock. PRICE **$218** (special for this month) includes crystals for B and one repeater channel (1, 2, 3 or 4), microphone, mobile mount, etc. Extra standard channels 50, 51, 1, 2, 3, 4, $8.00 each. Prices include Sales Tax. Freight or postage and insurance extra (allow $4.50). All sets pre-sales checked and covered by our 90-day warranty. Prices and specifications subject to change.

AUSTRALIAN AGENT:

bail ELECTRONIC SERVICES 60 Shannon St., Box Hill North, Vic., 3129. Ph. 89-2213

QLD. MITCHELL RADIO CO., 59 Albion Road, Albion, 4010 Ph 57 8830
N.S.W. STEPHEN KUHL, P.O. Box 56, Mascot, 2020 Ph Day 667 1650 A.H. 371 5445
S.A. FARMERS RADIO PTY. LTD., 257 Angas Street, Adelaide, 5000 Ph 23 1268
W.A. H. R. PRIDE, 26 Lockhart Street, Como, 6152 Ph 60 4379

tor and noting its value (usually 330 pF). The next highest value in the preferred range is entered on the board at C3A and a capacitor having about 8-10 times the value of C3A placed at C3B. It may be necessary to trim C3A a little if the tuning core will not peak the signal.

The chokes marked "F29" are simply Neosid 12 mm F29 tuning slugs with a single wire passing through the central hole. Output at low impedance is taken from the junction of C3A and C3B.

In conjunction with the product detector AGC and audio of Unit 3 the IF strip has a measured sensitivity of 3 microvolts for a discernible CW signal. Its AGC range is in excess of 120 dB.

TABLE 2.6 — COIL DATA

	IFT 1, 2, 3				
Frequency MHz	Primary Turns	AWG	Link Turns	C1,2,3A pf	C3B pf
5.0	35	32	9	150	1500
9.0	25	32	7	100	1000
10.7	25	32	7	68	680

Notes

(a) All coils are close wound on Neosid 722/1 formers.

(b) Links are wound over the cold or earthy ends of the tuned windings.

Section 2 — Unit C — AM/SSB/AUDIO/AGC

Figure 7 gives the circuit diagram covering all the functions available, while Figure 8 gives the component layout on the 6 in. x. 2 in. PCB.

Note that only those functions required need be incorporated, the components associated with unused functions simply being omitted.

Each on board function will now be separately described.

(i) **AM Detector**

A simple voltage doubler type of detector uses two germanium diodes. IF is fed to the diodes via the 0.1 capacitor and the demodulated output appears across the 22 k load resistor. This resistor is decoupled for RF, but not for audio, by the 100 pF capacitor in parallel with it. An 0.1 mfd capacitor takes the resulting audio to output on the PCB.

(ii) **The Product Detector**

A Motorola 1496/1596 or Fairchild 796HC TO5 IC is used in a configuration suggested by the manufacturers save that the biasing has been modified to allow a single HT supply rail to be used. Oscillator input is fed to pin 8 of the IC while the SSB or CW signal from the IF strip is fed to pin 1. Note that both these entry ports require a low impedance source. Oscillator input Vernier balancing is not used, approximate (and sufficient) balance being provided by the circuit shown. Audio output is well filtered before being applied to a 741 op amp.

As shown the 741 has a gain of just under 50 in order to supply sufficient drive to the AGC rectifier diodes. This order of amplification is in excess of that required to drive the LM 380 audio chip so that a dropping resistor is used in series with the 10 k audio volume control. The value of this dropping resistor is shown as 47 k in the circuit diagram but can be varied to suit other audio amplifiers, or other conditions, should it be necessary. The value of this resistor can be in the 10 k to 100 k range.

(iii) **The BFO**

This is a simple FET oscillator with provision for adjustment of the crystal oscillating frequency on to the correct portion of the filter slope. Either a USB or LSB crystal can be used but not both, unless external crystal switching is used. L7/C7 are resonant at the crystal frequency and coil and capacitor data are the same as those given in Table 2.6 except that the link coupling is about one eighth of the number of turns on the tuning winding.

Provision is made on the board for a separate BFO oscillator offtake so that its output can be used elsewhere — say, for example, to feed the transmit mixer of Unit D and/or the logic of a digital dial.

(iv) **The AGC Generator**

The full output from the 741 audio preamplifier is taken via the 0.1 coupling capacitor to a voltage doubler rectifier using two germanium diodes. The DC resulting from the rectification of the applied

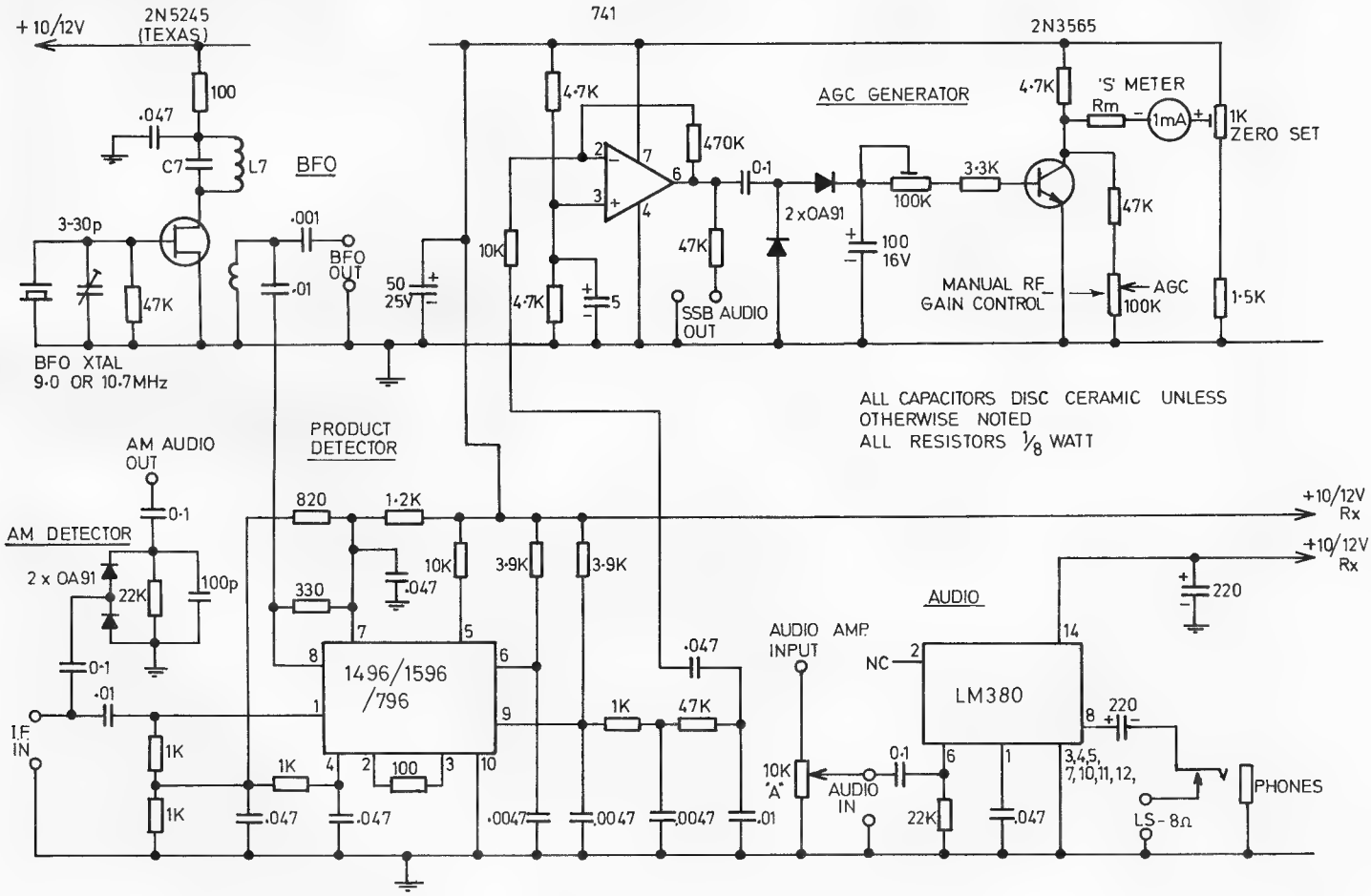

FIGURE 7 – UNIT C – BFO / PROD DET / AUDIO / AGC

R.H.Cunningham

The Name Everybody Knows

R. H. Cunningham is the name to know when it comes to superior quality communications and electronic equipment and components. Names of products that have proved themselves in the field of international electronics; products such as Sennheiser microphones and test equipment, Eddystone communications receivers, Bulgin components, Sonnenschein batteries, Alert fuses, Paso sound equipment, Dow-Key RF components, Stolle aerial rotators, Millbank PA equipment to name some. But let us tell you more and in detail. . . . WRITE NOW and we will register you to receive our FREE monthly Technical Library Service Bulletin.

R.H.Cunningham Pty. Ltd.

493-499 Victoria Street, West Melbourne, 3003, P.O. Box 4533, Melbourne, Victoria.
Phone 329 9633. Cables: CUNNIG MELBOURNE. Telex: AA31447
N.S.W.: Sydney. Ph.: 909 2388. W.A.. Perth. Ph.: 49 4919. QLD.: L. E. Boughen & Co. Ph.: 70 8097.
S.A.: Arthur H. Hall Pty. Ltd. Ph.: 42 4506.

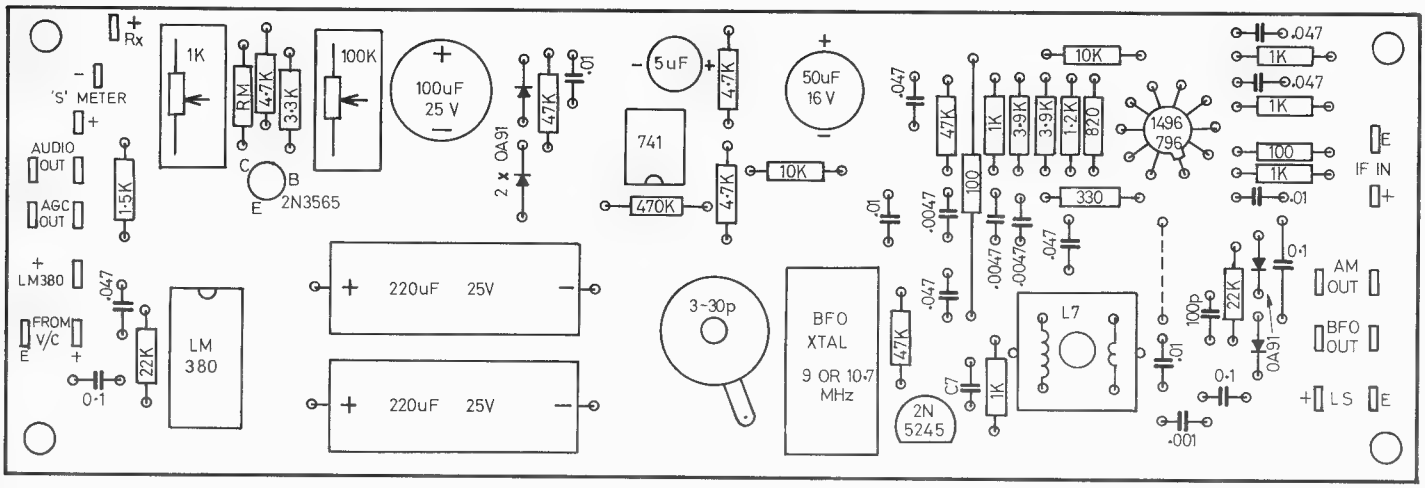

FIGURE 8 – UNIT C – BFO/ DETECTORS/ AUDIO/ AGC – COMPONENT LAYOUT

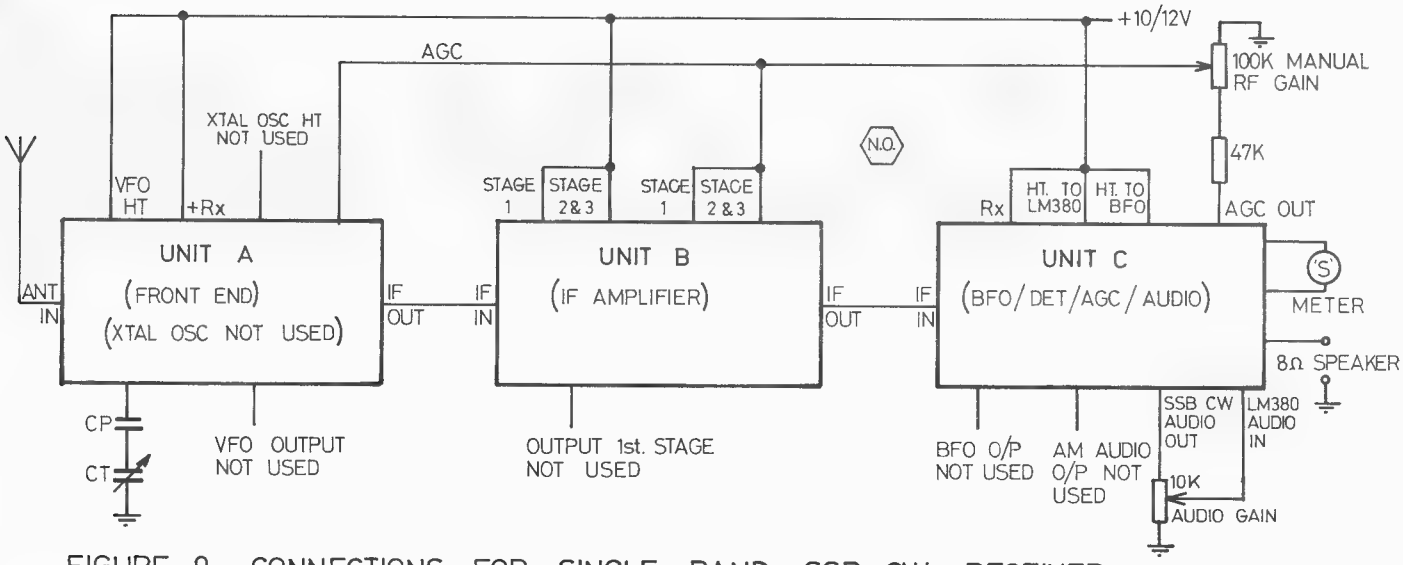

FIGURE 9 – CONNECTIONS FOR SINGLE BAND SSB-CW RECEIVER

audio is used to charge up a 100 mfd capacitor. The low impedance output of the 741 allows the capacitor to be charged quickly when the generator is *"hit"* with a sudden large signal and thus has a *"quick attack"* characteristic.

The charge on the capacitor is applied through a 100 k trimpot direct to the base of a 2N3565 transistor whose emitter is earthed and which has a 4.7 k collector load.

With no charge on the capacitor (i.e., no audio signal present) the 2N3565 is switched off and its collector assumes a potential near to the HT supply. The AGC line is taken from the collector so that the RF and IF controlled stages are at maximum gain.

When a signal appears, rectified DC progressively switches the transistor on, thereby causing the collector to assume a lower potential and thus reducing the gain of the controlled stages.

When the audio signal is removed (or varies) the 100 mfd capacitor discharges through the 100 k resistor and the emitter/base function of the 2N3565 giving a "slow decay" characteristic to the AGC. Note that with all of the trimpot in circuit the decay time is around 10 seconds. This decay time can be varied downwards by adjustment of the trimpot. With the trimpot out of circuit and only the 3.3 k fixed resistor in circuit the AGC decay time is a fraction of a second.

(v) **S Meter**

A 1 mA meter movement is used in a bridge circuit to indicate the voltage on the AGC line and thus the strength of the received signal. Resistor RM in series with the meter will vary according to the meter movement used but 4.7 k is a good starting point.

With no signal applied, the 1 k trimpot is adjusted to give a zero meter reading. RM is then chosen so that the meter reads, say, 70 per cent full sacle on what is judged to be an S9 signal. Or, of course, it can be chosen to give a meter reading that is socially acceptable to DX contacts!!

(vi) **The Audio Output Stage**

An LM380 IC is used to drive an 8 ohm speaker. Output will be dependent on the HT supply but at 10 volts around 500 mW can be expected at full drive. The HT feed point is kept separate so that a higher supply voltage than that used elsewhere in the module can be used to provide more audio output should it be required. However, at the lower supply voltages the chip needs no cooling and its current demands are not excessive.

The three modules so far described can be combined to make a single band SSB/CW receiver. Figure 9 shows the interconnections needed to do this.

Sensitivity is typically 0.2 micro volt for a very readable CW signal or a marginally readable sideband signal. AGC control is excellent and no problems have been encountered with the (average) 200 watt PEP signals put out by the dozen or so amateurs active on 20 metres who live within a mile radius of the writer's QTH.

Part III will describe the modules necessary to convert a single band SSB receiver into a single band SSB 25/30 watt transceiver. ■

VHF EQUIPMENT

FTV-650B New model 6m transverter from Yaesu .. **$185.00**

FT-620 Transceiver for 6m, SSB, AM, CW, 10 W, AC & DC operation, also inc. AM filter and calibrator, a few only at this special price of **$385.00**

FT-620B Transceiver, same specifications as FT-620, but with new design of front panel and a few small modifications, **$468.00**

FT-220 Transceiver for 2m, SSB, FM, CW, 10-15 W output, AC & DC operation. Includes calibrator and modified for operation of simplex and repeaters on 146.5 - 147 MHz. A few only left at **$475.00**

FT-224 Transceiver for 2m FM, 10 W, 24 Channels. Panel meter reads signal strength, discriminator centre scale, and transmitter output. Includes priority "call-channel" facility and monitor. A premium quality unit, with all accessories and six channels included (B, 50, 1, 2, 3 & 4). Real value at **$248.00**

S200R Transceiver, 2m FM, 200 channels frequency synthesized, 146 - 148 MHz. No more crystals to buy! A real beauty at **$448.00**

2XA Transceiver, 2m FM, 12 Chan. 10 W. An excellent little rig, with mobile mount, microphone and cables. Includes 4 USA channels and Aust. B plus one repeater. Extra chans. 50, 51, 1, 2, 3, 4, $8.00 each. Priced at a very economical .. **$169.00**

PFT-203 Transceiver 2m, FM, 25 channels, 30 W. For details see other advertisement this issue. Price this month . **$218.00**

FP-2 Power supply 2, 3, 4V AC to 12V DC. Housed in attractive cabinet, with speaker and battery charging facilities. Ideal for home operation of FM Transceivers up to 20 W **$69.00**

All prices include Sales Tax. Freight or postage and insurance extra. All sets pre-sales checked, stock of spare parts, and 90-day warranty. Prices and specifications subject to change.

bail ELECTRONIC SERVICES 60 Shannon St., Box Hill North, Vic., 3129. Ph. 89-2213

QLD. MITCHELL RADIO CO., 59 Albion Road, Albion, 4010 Ph 57 6830
N.S.W. STEPHEN KUHL, P.O. Box 56, Mascot, 2020 Ph Day 667 1650 A.H. 371 5445
S.A. FARMERS RADIO PTY. LTD., 257 Angas Street, Adelaide, 5000 Ph 23 1268
W.A. H. R. PRIDE, 26 Lockhart Street, Como, 6152 Ph 60 4379

BOOKS OF INTEREST FOR AMATEUR OPERATORS

HAM NOTEBOOK (Ham Radio)	$5.10
BUILDING HI-FI SPEAKER SYSTEMS (Philips Application Book)	$3.45
UNDERSTANDING AMATEUR RADIO (ARRL)	$4.10
FM AND REPEATERS FOR THE RADIO AMATEUR (ARRL)	$4.35
SPECIALIZED COMMUNICATIONS TECHNIQUES FOR THE RADIO AMATEUR (ARRL)	$4.50
THE RADIO AMATEUR'S VHF MANUAL (ARRL)	$5.10
SINGLE SIDEBAND FOR THE RADIO AMATEUR (ARRL)	$4.35
THE ARRL ANTENNA BOOK (ARRL)	$5.10
BASIC TELEVISION PRINCIPLES AND SERVICING Fourt Edition (Bernard Grob)	$21.80
TTL DIGITAL INTEGRATED CIRCUITS Part I (De Muiderkring)	$8.95
TRANSISTOR EQUIVALENTS 9th Edition (De Muiderkring)	$5.75

Add POSTAGE: LOCAL 55c INTERSTATE 85c

McGILL'S AUTHORISED NEWSAGENCY

Established 1860 187-193 ELIZABETH STREET, MELBOURNE, VIC., 3000

"The G.P.O. is opposite" Phones 60-1475-6-7

Commercial Kinks

with Ron Fisher VK3OM
3 Fairview Ave., Glen Waverley, 3150

LET'S KEEP IT CLEAN!

No, I am not going to relate a few doubtful jokes; instead I think it's time we took a look at methods of cleaning up the dirty appearance of that pride and joy transceiver sitting over there on the bench.

It seems to be a sad fact of amateur life that our friend the average amateur operator never bothers to clean his rig. Mind you, he probably cleans his car with great care every weekend.

Deterioration in appearance of a modern amateur rig is a slow but sure process, much faster if you happen to be a smoker. Incidentally, having looked at dozens of receivers, transceivers and transmitters over the years, there is no doubt that a smoking amateur will have more trouble with his gear than his non-smoking compatriots. The by-products of cigarette smoke will firstly discolour the front panel, fog up the dial and meter faces, and finally work their way into valve sockets, relay contacts and even into the bearings of VFO tuning capacitor. It forms a sticky coating over valves and, in conjunction with dust, forms a substance that will reduce the efficiency of a final stage to a marked extent.

However, let's start at the beginning; the microphone. If you use a typical curly-cord type push-to-talk microphone, possibly the cord has stretched so that it is now a series of elongated curves instead of its original shape. First clean the cord with warm soapy water and an old soft tooth brush. Even if you are a normally clean type, the amount of dirt that comes off will amaze you. Now just rewind the cord back on its self turn by turn. This will re-tension the cord to like new condition. Incidentally, this operation can be carried out several times before the cord finally has to be replaced. As for the microphone, remove the insert and wash the case in soapy water, again using an old toothbrush to remove the dirt from all corners.

Now to the set. Remove the cabinet. Once again we will use the soapy water method but this time use a soft nail brush. This is very effective on crackle finish surfaces as even in very clean surroundings, dust will settle in to the minute indentations of the surface. Often a good wash is all that is needed to restore the finish to its original condition; however, if you are the fussy type, apply a small quantity of wax and brush it up with a white shoe type brush. One of the many aerosol furniture polishes such as *Mr Sheen* are easy to use. Now, if the cabinet has a smooth finish such as you find on Yaesu equipment, the lustre can be restored with an application of one of the auto polishes with a slight cutting action. Even one of the mild brass polishes is good. Finish off with wax and polish with a soft cloth.

For dusting the chassis and the components on it, a small paint brush is ideal. If you happen to have a harmonic at kindergarten, the round paint brushes used there fit well between closely packed parts. If the dust will not yield to a dry brush, apply a little carbon tetrachloride or some contact cleaner. If you have compressed air available, or even a blowing attachment for your vacuum cleaner, it is great for blowing dust from variable capacitors and other nooks and crannies.

The front panel is best attacked by removing the knobs and then cleaning with applications of spray wax, then finishing with a soft cloth. The knobs are often the dirtiest part of the front. While they are off, soak them in warm soapy water for a few minutes and then use the old tooth brush to remove the dirt.

While you have the knobs off it's a good time to check that the nuts that hold the various controls to the front panel are tight. If you carry out the above procedure every twelve months at least, it might save you buying a new rig—the old one will look too good. It will also improve the resale value to quite a marked extent. Try it and you will be delighted. ■

Newcomers Notebook

with Rodney Champness VK3UG
44 Rathmullen Rd., Boronia, Vic., 3155

BELONGING TO THE WIRELESS INSTITUTE OF AUSTRALIA

Should you belong to the WIA? Some will say — belong to that organisation? — not on your life; others will say that not to belong is sacrilege, you're letting the side down. Some people are very anti-Institute without cause, using a manufactured reason/excuse. There are others equally biased to the other extreme who believe that the Institute can do no wrong, and refuse to listen to reasoned argument about the deficiencies of the WIA.

It should be most apparent that with lack of willing people on Council, or on various committees, the system is not working as it should or could.

If you, as a newcomer, think that you have no right to stick your nose into the affairs of the Institute how wrong could you be. As a newcomer your view could be just what is wanted to get some line of action going in the right direction. Sometimes, if we have been close to something for a long time, we do lose our ability to be objective. We get in a rut and the system runs down. This is one of the reasons that some people use for not joining the Institute, or WIA or whichever term you wish to name our organisation. It is not a good reason to say "I won't join the Institute, because they do this that and the other wrongly". You should get in there and *CORRECT* what you think is wrong or at least give it a good try.

Many people ask, "What is there in the Institute for me?" If you are prepared to do nothing, ultimately there will be nothing for you — for instance possibly no bands to operate on. How come, you say. Simple. If you don't support the WIA, with its evident faults notwithstanding, we as a country will not have representation at Geneva in 1979. The commercial concerns — ever hungry for new frequencies to exploit — will be there and they will have done their homework well, and may be able to prove that the amateur bands are not being used, and that they (commercials) can use them *VERY* effectively. Is that what you want? If so, don't belong and don't help, and in a few years your expensive gear will have no value because you will not be able to use it.

There are many other reasons for belonging to the Institute not the least being that you receive the best amateur radio magazine in the Southern Hemisphere.

There are many other benefits not quite so obvious. Okay, you say. Why preach to me. Well, there are as many non-members as members, so why not try and get your friends to join. After all, why should they reap the benefits of what you are paying for, when it could mean that your subs could be lower for one thing.

I am most critical of some aspects of the operation and aims of the Institute, but you will notice I am still a member.

NOVICING

As I write this at the end of June, the Novice Amateur Examination has not been held — to the disappointment of 832 candidates throughout Australia — according to the Institute insert. No news at this time as to when the initial exam will take place, but possibly it will have taken place by the time this appears in print. In retrospect it may have been a welcome delay for some so that they could get their morse code up to scratch — the sample theory paper looks fairly simple so that may not be a worry to many, and the regulations exam is of the normal standard.

A 10 WATT NOVICE TRANSMITTER FOR 3.5 MHz

The series of articles on the novice transceiver will probably commence next month. The transmitter is described over two parts: the first part is the RF section complete to the point of operating on CW. It has a single valve, a 6GV8 a television vertical section type, with the triode as a Pierce oscillator feeding into the pentode as a class C power amplifier. For operator convenience the transmitter uses a semi-break-in method of keying — in other words as soon as you work the key the transmitter goes onto transmit cutting off the receiver: and when the key is released the transmitter changes back automatically after a short period to stand-by with the receiver operating. This is a much less tedious method of changeover than mechanically operating a switch. This requires

ANTENNA PARTS, KITS

QUAD HUB: $23.00 plus P/P $2.00

QUAD KIT: $120.00. Freight forward.

Consisting of: Hub: 12 ft. solid F/G. Spreaders: Aluminium Extenders. Ferrules. Adaptors: 350 ft. 0.064 Hard Drawn Copper wire.
Nylon line and insulators.

MOBILE ANTENNA PARTS:

6 ft. solid F/G blanks, ½-¼ inch	**$4.00**
Solid brass butt fitting, ½ in. whit. or 3/8 in. UNF thread	**$2.00**
Brass tip chuck	**50c**

S. T. CLARK
P.O. BOX 45, ROSANNA
VIC., 3084 Ph.: 45-3002

VK2 DIVISION SOUTH WEST ZONE CONVENTION

To be held in DENILIQUIN on 4th & 5th OCTOBER, 1975

Features will be **Transmitter Hunts — Scrambles — Competitions for best piece of Home Brew Gear and best Decorated Cake on Amateur Radio Theme.**

An AUCTION of **Surplus Equipment and Components subject to an adequate amount being provided.**

Accommodation bookings should be finalised by 8th August. After that date we'll do all we can, but cannot guarantee accommodation.

A deposit of $10 should accompany all accommodation bookings.

For further information write to:

The Secretary,
1975 South West Zone Convention Committee
P.O. Box 312, Deniliquin, 2710

10.7 MHz CRYSTAL FILTERS FOR FM

SYNONYMOUS FOR QUALITY AND ADVANCED TECHNOLOGY

KVG

MATCHING CRYSTAL DISCRIMINATORS

NBFM	XD107-01
WBFM	XD107-02
(1-9)	$22.10 each

EXPORT ENQUIRIES WELCOME

SPECTRUM INTERNATIONAL
BOX 1084A CONCORD
MASSACHUSETTS 01742
U.S.A.

Filter Type	XF107-A	XF107-B	XF107 C	XF107 D	XF107-E	XF107-SO4	XF102
Application	NBFM	NBFM	WBFM	WBFM	WBFM	NBFM	NBFM
Number of Filter Crystals	8	8	8	8	8	4	2
Bandwidth	12 0 kHz	15 0 kHz	30 0 kHz	36 0 kHz	40.0 kHz	14 0 kHz	14 0 kHz
Pass Band Ripple	⩽ 2 dB					< 1 dB	⩽ 2 dB
Insertion Loss	⩽ 3.5 dB	⩽ 3.5 dB	⩽ 4.5 dB	⩽ 4 5 dB	⩽ 4 5 dB	⩽ 3 dB	⩽ 1 5 dB
Input Output Z_t	820 Ω	910 Ω	2000 Ω	2700 Ω	3000 Ω	910 Ω	2500 Ω
Termination C_t	25 pF	25 pF	25 pF	25 pF	25 pF	35 pF	-
Shape Factor	(70 dB) 2.4	(70 dB) 2 3	(70 dB) 2.2	(70 dB) 1 9	(70 dB) 2 0	(40 dB) 3.0	(20 dB) 3 6
	(90 dB) 2 8	(90 dB) 2 9	(90 dB) 2 7	(90 dB) 2 5	(90 dB) 2.5		(30 dB) 5.7
Ultimate Attenuation	> 90 dB					> 60 dB	> 30 dB
Size	1 27/64" x 1·3/64" x 3/4" High Mounting Hardware Included					Hc 6/u can	Hc 18/ can
Price (1-9)	$40 60					$18 95	$7.95

Registration Fee: $1.00; Air Mail: 26c per ½ oz.
Shipping weights: Filters 2 oz ea., Crystals ½ oz ea.
All Prices in U.S. Dollars.

FERGUSON

Manufacturers of: Electrical / electronic equipment, wound components and lighting control equipment.

BRANCHES IN ALL STATES

Ferguson Transformers Pty Ltd.

Head Office
331 High Street, Chatswood
NSW 2067

PO Box 301 Chatswood, NSW, Australia 2067

Phone: 02-407-0261

HIGH PERFORMANCE

Both kits employ low noise UHF MOSFETS, and the converter has variable IF gain.

NOTE—The converter is designed for use in a transverter and does not include an oscillator.

2 METRE CONVERTERS and PREAMPLIFIERS

CONVERTER: KIT	**$10**
Constructed	**$20**
PREAMP: KIT	**$6**
Constructed	**$10**
P/P	**50c**

IPSWICH AND DISTRICT RADIO CLUB
C/- 20 Peacock Street, Leichhardt, Qld. 4305

the use of two small transistors and a few minor parts. The transmitter is wired ready for the fitting of a modulator which is described in the second part.

The modulator uses a 6AU6 as the microphone amplifier and a 6BQ5 as the modulator valve. The circuitry is arranged so that the speech bandwidth is only from about 300 to 3000 Hz, with modulation over 100% in the upward direction and less than 100% in the downward direction — this stops splatter without dropping the effectiveness of the transmitter. Press to talk has been included for convenience and works in with the CW semi-break-in system. All the switching for the AM/CW changeover is included in the first part of the transmitter description. No power supply is shown in these articles, although a suitable one will be described at a later date. Power supplies generally are not a very complex item of equipment.

GENERAL

Very recently *David Down* received good news — he has passed his full amateur ticket — congratulations David. Incidentally, David is a relative newcomer. He also runs a Radio Club with a friend in one of the southern suburbs of Adelaide. David's address, for those who wish to write to him direct on matters pertaining to this column, particularly on those sections he has written, is as follows: *17 Brodie Crescent, Christies Beach, 5165.* There will be more of David's articles in the near future.

Thank you to those amateurs, amateurs to be and short wave listeners who took the time to write to me about the queries I had in the June issue of AR. Wherever possible the suggestions will be acted upon.

Are you looking around for a Novice transmitter or a Novice transceiver? Some of the old ex-service transmitters and transceivers may fit the bill — although you may need a bit of help to get them going properly. The following sets fit the bill for 3.5 MHz with little modification: No. 122, 3BZ, No. 109, Type A Mk3, Type 3 Mk2, ATR2 and No. 62. I am not saying that all of these sets are marvellous, but they require little modification if any. The following sets require modification for crystal control as well and are: No. 11, No. 19, No. 22, No. 22 English, FS6. These sets would have to be cheap to make it worthwhile. Other sources of transmitters and transceivers will become apparent as time goes by and I will endeavour to point you in the right direction. See you next month with the first part of the Novice transmitter. ■

Contests

with Jim Payne, VK3AZT
Federal Contest Manager,
Box 67, East Melbourne, Vic., 3002

CONTEST CALENDAR

AUGUST
- 9-10 European CW
- 16-17 Remembrance Day
- 23-24 All Asian CW
- 30-31 Seanet Worldwide Phone & CW

SEPTEMBER
- 13-14 European DX phone
- 20-21 Scandinavian CW
- 27-28 Scandinavian Phone

OCTOBER
- 4-5 VK/ZL Oceanic Phone
- 11-12 VK/ZL Oceanic CW
- 25-26 CQ WW DX Phone

NOVEMBER
- 8-9 European RTTY DX
- 29-30 CQ WW DX CW

REMEMBRANCE DAY CONTEST

As this was written before the rules for this year's RD Contest have been published I can only hope that by the time you, the contestants, read this at least 1,000 of you will have decided to spend some time on the air during the weekend of August 16/17 and subsequently send in a log. Collectively you will send a lot of paper to Box 7, East Melbourne so please take special care to prepare a face sheet as requested and attach it to your log. Last year quite a number of face sheets were omitted and this makes a great deal more work for the FCM. For example, if the section for which you have entered is not shown, i.e. phone, CW or open, each RST report may have to be perused to find out the section for which the log is entered. It will also be of great help if entrants who operate exclusively on 52 MHz and above will indicate this on the front sheet. Finally, good luck to you all and may the sun have the measles during this weekend.

ALL ASIAN DX CW

1000 GMT Aug 23rd to 1600 GMT Aug 24th
All bands 1.9 to 28 MHz. The contest call is CQ AA for non-Asian stations, CQ Test for Asian stations. OM stations exchange RST and operator's age, YL stations give RST and OO. Scoring is one point for each Asian station (except KA). Multiplier is number of different Asian prefixes worked on each band, using the WPX rules. Contacts between non-Asian stations do not score. Final score is sum of the contest points on each band multiplied by sum of multipliers on each band. The highest scorer in each continent will get a medal and certificate from the Minister of Posts and Telecommunications of Japan. Logs must reach JARL, Box 377, Tokyo Central, Japan, before 30th Nov., 1975. Results should be known about April 1976.

The following are countries in Asia:

A4X (Sultanate of Oman)
A51 (Bhutan)
A6X/MP4D (United Arab Emirates)
A7X/MP4Q (Qatar)
A9X/MP4B (Bahrein)
AC3 (Sikkim)
AP (West Pakistan)
BV
BY
CR9
EP
HL/HM
HS
HZ/7Z
JA/JE/JF/JG/JH/JI/JR
JD1 (Ogasawara Is.)
JT
JY
OD5
S21 (Bangladesh)
TA
UA/UK/UV/UW9-0
UD6/UK6C, D, K
UF6/UK6F, O, Q, V
UG6/UK6G
UH8/UK8H
U18/UK8A-G.I.L.O. T-Z
UJ8/UK8J.R.
UL7/UK7
UM8/UK8M.N.
VS6
VS9M/8Q6
VU
VU (Andaman & Nicobar Is.)
VU (Laccadive Is.)
XU
XV/3W8
XW8
XZ
YA
YI
YK
ZC4/5B4
4S7
4W
4X/4Z
7O (South Yemen)
70/VS9K (Kamarn Is.)
8Z4
9K2
9M2 (West Malaysia)
9N1
9V1
1S9 (Spratly Is.)

A copy of the results will be sent to you if you enclose a self-addressed envelope and a reply coupon with your log. Reply coupons can be purchased at Post Offices.

MARTS SEANET WORLDWIDE CONTEST 1975

001 GMT 30th August to 2359 31st August

Information about this contest arrived from "Eshee" 9M2FK and the cover bore an instruction: "Smile B4 opening — Open B4 reading — Read B4 answering — Answer B4 long". One of the aims of the contest is to publicise the 5th SEANET CONVENTION to be held in Kuala Lumpur from Nov. 7-9, 1975. The contest is being held on Aug 30/31 which is Malaya's Independence Day. Phone or CW (no cross mode) may be used on all bands 160 thru 10 metres. Contest call is "CQ Seatest" for phone and "CQ Sea" for CW. Usual RS/T and QSO numbering.

Contestants in SEANET area (includes VK) score 1 point for contacts with other SEANET stations (except other VKs) and 2 points for contacts outside SEANET area. VK contestants use a multiplier of 3 for each country outside SEANET and 2 for each country within SEANET.

A separate log is required for each band and a summary sheet showing Band, Number of QSOs, Points, Multiplier and score. A description of the station and antenna is required together with the usual certification.

The highest VK scorer will receive a commemorative certificate of the 5th Seanet Convention. Worked All Malaysian Areas Award can be claimed by sending in a separate log sheet covering the required number of contacts i.e. ten 9M2, ten 9V1, one 9M6, one 9M8 and one VS5. Logs etc. to reach MARTS SEANET CONTEST CTEE, 231-C, Jalan Pekeliling, Bukit Glugor, Penang, Malaysia, not later than 30th September. Results will be announced Nov. 8th.

Only one contact per band with the same station is permitted.

SEANET AREA COUNTRIES

A4, A51, A6, A7, A9, AC3, AP, BV, CR9, DU, EP, HL/HM, HS, JA etc., JD1, JY, KC6, KG6, KH6, KX6, P29, S21, VK, VQ9, VS5, VS6, VS9K, VS9M/8Q6, VU2, VU (Andaman, Nicobar and Laccadive Is.), XU, XV5, XW8, YB, YJ8, ZL, 3D2, 3B6, 3B8, 4S7, 4W1, 5Z4, 9M2, 9M6, 9M8, 9K2, 9N1 and 9V1.

EUROPEAN DX PHONE

0000 GMT Sept 13 to 2359 Sept 14th
See details as given for European CW in Amateur Radio, July, 1975. ■

Letters to the Editor

Any opinion expressed under this heading is the individual opinion of the writer and does not necessarily coincide with that of the Publishers

The Editor,
Dear Sir,
This is International Women's Year, but where are all the VK YLs? It is elating to be told,

"You are my first VK YL", but this turns to embarrassment when asked,

"How many Australian YLs are there? We never hear them".

Well, where are they? We know they exist, so ladies show your faces.

Compare Australia to USA, New Zealand, or Germany — these countries have very active YL groups. They have YL clubs, special certificates for working YLs eg. DVCCYL, WACYL, and WARO awards, OM/YL contests, and special notes in amateur radio magazines.

What do we have to boast of — nothing! We don't even know how many YLs there are in Australia.

So ladies let us get together and do something to increase YL activity and interest in amateur radio. Let us at least know you exist, whether you have a call or not.

Here is a list of the YLs we know of (mainly with reference to the call book). Can you help us upgrade it.

VK1—YL.
VK2—HD, MI, MR, SU, AIA — Murial, APR, AOK — Hebe, BSB — Susan, AXS — Mona, BYL — Wendy.
VK3—HQ, KS — Mavis, KT — Brenda, VB — Clarice, YL — Austine, ADT, AGO, AYL — Norma, BAK — Vi, ZYX — Dawn, ZYL — Rhonda, BJB — Joan.
VK4—EQ — Evelyn, VV — Linda.
VK5—LM — Lorraine, YL, YW — Merna.
VK6—MH.
VK7—YL, LY — Anne, ZA.

Some further suggestions — how about our own VK YL award and a net ragchew session.

BRIGHT STAR CRYSTALS

- **PROMPT DELIVERY GUARANTEED**
- **ALL TYPES OF MOUNTINGS**

Such as HC6/U (style D) . . . HC18/U (style J) . . . HC25/U (style K) . . . etc. . . Frequency range up to 140MHz on 5th overtone.

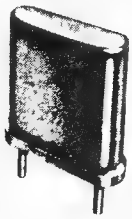

- **ACCURACY**
- **STABILITY**
- **ACTIVITY**
- **OUTPUT**

BRIGHT STAR CRYSTALS PTY. LTD.

35 EILEEN ROAD, CLAYTON, VIC., 3168. Phone: 546-5076 (Area Code 03).

INTERSTATE CLIENTS: Contact your Local Agent

Our increased production now enables us to offer Special Discounts from 10%
Let us quote you for all your Crystal requirements.
Our easy-to-read Price List is now available.

Sydney: PARIS RADIO ELECTRONICS, 7a Burton Street, Darlinghurst, N.S.W. 2010, Phone: 31-3273.
Perth: W. J. MONCRIEFF PTY. LTD., 176 Wiftenoon Street, East Perth,, 6000, Phone: 25-5722.
Brisbane: FRED HOE & SONS PTY. LTD., 246 Evans Road, Salisbury North, 4107, Phone: 47-4311
Adelaide: RQGERS ELECTRONICS, P.O. Box 3, Modbury North, S. A. 5092. Phone: 264-3296.

"WILLIS" AIR-WOUND INDUCTANCES

Take the hard work out of Coil Winding, use — "WILLIS" AIR-WOUND INDUCTANCES

No	Dia Inch	Turns per Inch	L'gth Inch	B & W. Equiv	Price
1-08	1/4	8	3	No 3002	**88c**
1-16	1/2	16	3	No. 3003	**88c**
2-08	5/8	8	3	No 3006	**$1.06**
2-16	5/8	16	3	No. 3007	**$1.06**
3-08	3/4	8	3	No 3010	**$1.28**
3-16	3/4	16	3	No. 3011	**$1.28**
4-08	1	8	3	No. 3014	**$1.42**
4-16	1	16	3	No. 3015	**$1.42**
5-08	1 1/4	8	4	No 3018	**$1.58**
5-16	1 1/4	16	4	No. 3019	**$1.58**
8-10	2	10	4	No 3907	**$2.29**

Special Antenna All-Band Tuner Inductance
(equivalent to B. & W. No. 3907, 7 inch)
7" length, 2" dia., 10 T.P.I. **Price $3.96**
Reference: A.R.R.L. Handbook, 1961

Willis Pi-Coupler Unit — $18.00
Stockists of Transmission Cables, Insulators and Hard Drawn Copper Antenna Wire
Write for range of Transmission Cables

WILLIAM WILLIS & CO.
PTY. LTD
Manufacturers and Importers
77 CANTERBURY RD., CANTERBURY VIC, 3126 Phone 836-0707

TP-8/74

NOVICE 27 MHz ANTENNAS (BY HY-GAIN)

5 ELEMENT BEAM (inexpensive)

- **17 Foot Boom**
- **10 dB Forward Gain**
- **Mounts Horizontal or Vertical**
- **1000 Watts Capability**

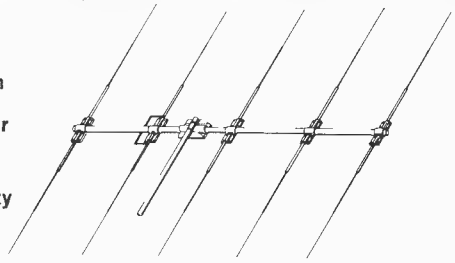

This beam features our exclusive Beta Match system which matches it to a 52 ohm feedline and puts the driven element at DC ground for noise-free operation and lightning protection. Constructed of high tensile strength aluminium tubing with a heavy machine formed boom-to-mast clamp. All hardware is iridite treated for maximum resistance from corrosion.

WEIGHT 14.1 lbs. **$58.00**

BIG GUN II (an authentic quad, 4-element)

- **Selectable Polarisation Vertical or Horizontal**
- **14.6 dB Gain**
- **20 Foot Boom**
- **All Aluminium Construction**

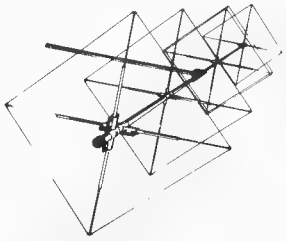

Hy-Gain's Big Gun II has the longest boom available of any selectable polarity antenna. The Big Gun II will give you the tightest beam available from a CB Quad antenna — so tight that you must aim directly at the signal on receive or you don't hear. Optimum tuning by our twin driven double loop elements provides greater capture area. All aluminium construction including the element wires, gives you durability.

WEIGHT 39 lbs. **$180.00**

MANY OTHER TYPES IN STOCK — e.g. 2-element Quads, Long John 5-element, 3-element low cost beam, vertical 5/8 W & 1/4 W I ground planes, mobile whips. Write for list and prices.

All prices include Sales Tax. Freight and Insurance extra. Prices and specifications subject to change.

bail ELECTRONIC SERVICES 60 Shannon St. Box Hill North, Vic., 3129. Ph. 89-2213

QLD. MITCHELL RADIO CO., 59 Albion Road, Albion, 4010 Ph. 57 6830
N.S.W. STEPHEN KUHL, P.O. Box 56, Mascot, 2020 Ph. Day 667 1650 A.H. 371 5445
S.A. FARMERS RADIO PTY. LTD., 257 Angas Street, Adelaide, 5000 Ph. 23 1268
W.A. H. R. PRIDE, 26 Lockhart Street, Como, 6152. Ph. 60 4379

To the OMs, don't think this does not concern you. Give the ladies a go, encourage them to be interested in the hobby, let them know there are other ladies to talk to, invite them into the shack to have a little ragchew or at least a listen.

In conclusion to all, please help us let the world know we have women interested in radio. If you have some suggestions of how this can be done please let us know. All ideas are welcome.

73s, 88s, 33s (where appropriate)
Norma VK3AYL, Rhonda VK3ZYL,
SWLs Irene and Jenny.

The Editor,
Dear Sir,

Last week thirteen amateurs formed a local net in Sydney on the 10 metre band. 28.500 MHz was established as an all modes CW, AM, SSB calling channel for mobile, handheld and base station operators.

28.100 MHz was allocated as a secondary net so as to allow 11 metre novice operators who obtained their full licence to use both the 11 and 10 metre bands with little modification and no loss of their existing 11 metre band coverage.

These nets were situated so that not only local but also international contacts could be promoted.

In Sydney there are now two HF calling channels in use. The idea is, when you are in the shack, tune your HF set to monitor one of these channels. On 11 metres there is 27.125 MHz for all modes. On 10 metres 28.5 MHz is primary and, for those wishing to add 10 metres onto their 11 metre transceiver, 28.1 MHz is encouraged. Shortly, it is hoped that details of a third all-mode Sydney calling channel for 1.825 MHz in the 160 metre band will be available.

Amateurs in Sydney would like to encourage amateurs interstate to adopt similar frequencies through their local WIA broadcasts and "on air" publicity so as to encourage interstate contacts as well as promote the local coverage characteristics of these bands.

For the latest DX news, experimentation and local ragchew see you on the 160, 11 and 10 metre nets.

VK2BVS

The Editor,
Amateur Radio
Dear Sir,

Further to my letter regarding the marking of A.O.C.P. Examinations by the P.M.G.

I rang the Radio Branch in Melbourne the other day to inquire as to the progress of same and was told (by an obviously harassed female) that there would not be much chance of obtaining results until well after August . . .

This is a deplorable state of affairs. When I asked as to the reason for such a delay I was told that all Radio Inspectors were occupied on the new Novice Licensing.

Whilst I am all in favour of this licence I do consider that a full licence takes precedence. My interest in radio is slightly dampened.

Impatient prospective amateur,
T. J. Connell
P.O. Box 718, Madang, P.N.G.
3 June, 1975

Awards Column

with BRIAN AUSTIN VK5CA
P.O. Box 7A, Crafers, SA. 5152

FROM QST, APRIL, 1975:

Announcement is hereby made of the availability of a new DXCC award and a new fee schedule for all DXCC awards.

The new DXCC award is for CW only. Applications for it will be accepted starting 1st June 1975. Credits for the CW DXCC must be for contacts made 1st January 1975 and after.

A new fee schedule for all DXCC awards and endorsements will go into effect starting 1st June 1975. All new applications for the DXCC award must contain $10 US (or 56 IRCs). This $10 will be used to return the applicant's confirmations by registered first class mail, the certificate, the DXCC lapel pin and handling. While applications may be made for any or all of the DXCC awards at the same time, the $10 application charge applies to each of the applications.

Each subsequent submission for endorsement (or completion of a new application) must contain a handling fee of $2 plus postage for the return of the applicant's confirmations.

The above charges apply to everyone. In addition, however, non-ARRL member applicants in Canada, the US and possessions (including Puerto Rico) must include an additional service charge of $5 for each new application and a $2 additional service charge for each endorsement application.

As of 1st June 1975 the application charge for the 5BDXCC will be $20.

WORKED ALL MALAYSIAN AWARD — W.A.M.A.

This award has been available from the Malaysian Amateur Radio Transmitters Society for some time, but in case of any of you haven't heard of it the opportunity is taken to announce the requirement again.

A WAMA Certificate will be issued to any ham that can prove he has established a two-way contact with the following call prefixes:

10 9M2 contacts with different callsigns
10 9V1 contacts with different callsigns
1 VS5 contact
1 9M6 contact
1 9M8 contact

Any special attachment like "All contacts by SSB", "All contacts on 80m SSB" etc. can be indicated on the certificate.

A list showing all contacts made, indicating callsign, date, time, mode and band, should be sent with the application. QSLs do not have to be included if the list has been certified by the local amateur society or two other amateurs.

The application should be followed by 5 IRCs to cover return postage.

Applications should be addressed to:
MARTS
PO BOX 777
KUALA LUMPUR, MALAYSIA ■

VHF UHF
an expanding world

with Eric Jamieson VK5LP
Forreston, S.A., 5233
Times: GMT

AMATEUR BAND BEACONS

VK0	VK0MA, Mawson	53.100
	VK0GR, Casey	53.200
VK1	VK1RTA, Canberra	144.475
VK2	VK2WI, Sydney	52.450
	VK2WI, Sydney	144.010
VK3	VK3RTG, Vermont	144.700
VK4	VK4RTL, Townsville	52.600
	VK4WI/1, Mt. Mowbullan	144.400
VK5	VK5VF, Mt. Lofty	53.000
	VK5VF, Mt. Lofty	144.800
VK6	VK6RTV, Perth	52.300
	VK6RTU, Kalgoorlie	52.350
	VK6RTW, Albany	52.950
	VK6RTW, Albany	144.500
	VK6RTV, Perth	145.000
VK7	VK7RTX, Devonport	144.900
P29	P29GA, Lae, Niugini	52.150
3D	3DAA, Suva, Fiji	52.500

These notes are being prepared whilst on holidays touring around Queensland, particularly around Cairns and Townsville, sampling some of the hospitality of the northern VK4 amateurs. Prior to leaving, Eddie VK4ZEZ advised of the operation of the 2 metre repeater in Townsville, call sign VK4RAT on repeater Channel 1. Service area extends as far as Alligator Creek. Eddie also mentions Mackay area calling frequency will be either Channel 40 or Channel 50. Rockhampton and South will be on Channel 40. So bear these channels in mind as you come up the Coast to Townsville. The inland roads are rather rough at present, and somewhat lonely, and of course, no amateurs!!

REPEATER NEWS

Now that repeaters and FM in general represent such a large portion of the operation on VHF of so many amateurs, it seems reasonable to give more space to their operations — particularly in the absence of much news from the tuneable end of the bands.

George VK3ASV mentions in a letter that the Victorian State Repeater Committee are fully organised, with Chairman Peter VK3BX, Vice-President Peter VK3ZPP, Secretary Ken VK3ZNJ, Publicity Officer George VK3ASV. The latest 2 metre FM repeater listings have been sent to AR by George, so will not be separately listed here. Here are a few items which should be of general interest, also to those travelling interstate.

ALBURY-WODONGA — Excellent results using Ch. 4 in simplex operation from Mt. Big Ben have been made. **MILDURA** — Channel 4 operation now satisfactory with installation of co-axial filter. **MT. WILLIAM** — Western Zone meeting decided to change from Ch. 1 to Ch. 7 to eliminate co-channel interference with Melbourne. **SWAN HILL** — Transmitter/Receiver is ready, awaiting licence approval. Probably Ch. 1. **MT. MACEDON** — Proposal to operate on Ch. 6. **LATROBE VALLEY** — VK3RLV on Ch. 2 has been resited to GLV10 Tower on Mt. Tassie, general upgrading of repeater, and power increase to 20 watts. Identifier using FSK & MCW and timers to be fitted at same time. **EAST GIPPSLAND** — VK3REG — Ch. 3 equipment ready, solar cell power supply being tested. Proposed site Mt. Sugarloaf, 900 m a.s.l. Should provide quite good area coverage of Lakes area and Princes Highway. **MT. DANDENONG** — VK3RML on Ch. 1 now operates with a timer, time out "beep", and FSK identifier. Transmitter power reduced to 60W to help heating problems, receiver sensitivity improved.

OTHER AREAS — If other States repeater publicity officers would like to forward information in a style similar to that shown above, outlining brief points which should be of general interest, please let me have the notes by 28th of the month to allow for editing and inclusion in material for AR.

As mentioned previously these notes are being written on holidays. Information is somewhat scarce, so will ask you to bear with me until next time.

Before closing, two things come to mind. Firstly, congratulations to the South East Radio Group in Mt. Gambier for another excellent Convention in June. The other is the Moonbounce report from Illawarra Branch of WIA (VK2AMW). Construction of the new one kilowatt power amplifier for the transmitter has been completed and installed. A letter from F9FT requests special EME tests with VK2AMW. If something eventuates from this, a new area should be available to Australia.

That's all for now. Closing with the thought for the month: "The wisdom of the spoken word may well exceed the value of the person uttering them".

The Voice in the Hills. ■

20 Years Ago

with Ron Fisher VK3OM

AUGUST 1955

August 1955 and the era of the 6146 was with us. Actually Phillips had been running front cover advertisements for this new tube for the three issues prior to August. 'AR' introduced the 6146 with a reprint from QST, "120 Watts of Audio Without Driving Power" by George Grammer, W1DF. Two pages of 6146 data for all classes of operation followed. However with disposals 807s available at a pound each it was going to take a few years for the 6146 to take over.

"An Introduction to Two Metres" Robert Black VK2QZ took a lighthearted look at the problems of firstly finding the two metre band and then getting equipment going. Two cartoons, drawn by an unnamed artist, illustrated the article.

Interesting correspondence was going on in the pages of Amateur Radio regarding the proposal by the VK6 Division to restrict limited licence holders to associate membership. Both Gordon Weynton VK3XU and David Rankin VK3ZAQ (now VK3QV) took up an opposing stand.

Back on the technical side, John Miller VK2ANF described the construction, calibration and operation of a vacuum tube voltmeter.

Wooden towers were popular twenty years ago. Ready made TV towers had not appeared on the scene. John Harlock VK6GU showed us his particular method for constructing a 42 foot lattice tower.

VK3AHH's DX notes reported that famous operator Bob Ford ex-AC4RF had been released from internment in Tibet and was now anticipating activity from VS6. Conditions on the bands were on the up and up with even a few reports of DX contacts on ten metres. ■

Hamads

- Eight lines free to all WIA members. $6 per 3 cms for other amateurs and SWLs.
- Copy should be in block letters or typescript, signed and forwarded to the The Editor, PO Box 150, Toorak, Vic. 3142.
- Excludes commercial advertising.
- Closing date for Hamads is the 3rd day of the month preceding publication.
- QTHR means the advertiser's name and address are correct in the current Australian Callbook.

FOR SALE

Conv. MTR 16 on 6 m, working, $26. Homebrew 2 m AM Tx 25W, needs xtl/VFO, $35. Part completed 3 band transceiver, beaut. VFO, dial, switching includes PSU and some parts, $30. 20-88 MHz v. accurate sig. gen., noise gen., xtl calib., $25. Many odd trannies, chokes, chassis, etc. Ask! Simon VK3ZUI, QTHR. Ph. (03) 92 3442 AH.

Vinten MTR13 with channel 1, and new dynamic mike, $55. Type 3 Mark 2 transceiver 160 to 20 metres, $50. VK3AHG, QTHR. Ph. (03) 288 2024 AH.

Transceiver and 24V power supply, Plessey model C13, 1.0 to 12.0 MHz in 1 MHz steps. Tx — AM/CW Rx AM/CW/SSB. $50.00. A. G. Lyall VK3ZTV 102 Seaford Rd., Seaford, 3198. Ph. (03) 786 5961.

400W Linear with P/S, uses 4C x 350A on 6m. 2.5/3.5 kV at 1 amp. 1 HP blower 800 CFM. Fully metered 3 in. Panel Meters. Reg. Screen and Bias Supplies. Extra Socket mounted for extra band. Spare 4C x 350A (new) 4C x 250B, 2 used. Will swap for early SSB Tx/Rx or sell $300 ONO. Could be modified to any HF band with any tube up to 4 kV rating. VK3ZAZ, R. S. D. Buninyong, Vic. 3357, Ph. 41 3777.

Thunderbird TH6 DXX Beam, tri-band, 6 el., excellent condition, little used, complete, $80, plus 50 ft. tower, crank-up alloy, very solid construction. Own transport to be arranged, $100. Both items too large for new QTH. VK2BGL, 4 Buena Vista Rd., North Springwood. Ph. (047) 54 1096.

Swan 500C Transceiver with VOX, mike, heavy duty power supply, hand book, excellent condition, $375. VK2AYE, QTHR. Ph. (02) 528 8825.

TCA 1677 Low Band Transceiver complete with mike, plugs and circuit, not converted, good condition, $40. AWA BS-50C, 50 Watt base station and receiver — high band less some valves, otherwise complete, not converted, $40 ONO. VK3ALT, QTHR. Ph. (03) 277 2337.

Complete Service Manual for communication Rx R5223 model, T.C.A. Also includes two large internal and external circuit diagrams, for $15. P.O. Box 141, St. Kilda West, 3182. Ph. (03) 699 2400 A.H.

Swan 350, mint cond., $250, C/W manual and spare finals. VK2BTL, QTHR. Ph. (03) 20223, X 209.

Collins 75SI Rx, fitted with 500 H CW filter, mint condition, $425. BC221 AK freq. meter, incl. 240V reg. supply. 125 kHz to 20 MHz, excellent cond., $100 ONO. VK2AS, QTHR. Ph. (02) 467 1784.

FT200 and Duke 5 SSB Transceiver with PSU and mike. $300 ea. or $550 both, Will swap. Adam Kay VK2AXN. Ph. (02) 451 9570.

Hallicrafters HT-44 80 to 10m SSB Tx, complete with PSU (110V AC), manual, spare final tubes, 100W PEP, perfect cond., $200. Yaesu FT101B Transceiver, perfect cond., only 6 months old, $560. Set of Asahi whips, with bumper mount, 80-10 metres, $50. Lionel VK3NM, QTHR. Ph. (03) 88 3710 AH, (03) 329 7888 X 45/46 Bus.

Scope Soldering Iron with spare tips, $15 (with transformer). 1973 XA Falcon Car Radio, perfect cond., $50. TV Camera with tripod stand, 2 lens, very good cond., $200. 2 HT Holden Wheels (new) each $20. Lionel VK3NM, QTHR. Ph. (03) 88 3710 AH, (03) 329 7888 X 45/46 Bus.

Realistic DX-150A, inbuilt Hy-Q cal. G.C., $150. Variable Condensers, 50c per gang. Jeff L-30409. Ph. (03) 546 3940.

FTDX560, late model, immaculate cond., with **silent** fan, noise blanker, CW filter, spare final tubes, etc. $435 ONO. **FV401** external VFO, as new in carton, $90 ONO. **Magnum 6** RF Speech Processor, suit FTDX400, 401, 401B, 560, 570, FT101 & 101B, mint condition, $100 ONO. VK3ARZ, 12 Explorers Court, Vermont South, (03) 232 9492.

PROJECT AUSTRALIS

With DAVID HULL VK3ZDH

OSCAR BEACONS

The Oscar 6 and 7 beacons provide vital data on the spacecrafts health and are a necessary part of the housekeeping of the satellites. These beacons are placed on the edges of the transponder passbands, 29.45 MHz in the case of Oscar 6, 29.50 and 145.98 MHz for Oscar 7. Strong signals picked up by the satellite on the corresponding edges of the uplink passband will tend to interfere with these beacons by being re-transmitted on top of, or alongside, the beacons, causing reduced readability and consequent problems to command stations. The VK2 repeater on the old Chan. 4 frequency has caused problems with the AO6 beacon since its launch and from time to time several CW stations have tended to operate within QRM range of the beacons. This can be a particular problem with the RTTY telemetry of AO7. It should be pointed out that the spacecrafts have reduced receiver sensitivities on their bandpass edges and thus the stations using the edges are reducing their on-ground received strength by straying too far from the passband centre. VHF FM users' co-operation would be appreciated also in avoiding inadvertent QRM of Oscar 7's beacon on 145.980 MHz.

PREDICTIONS FOR SEPTEMBER 1975

OSCAR 6				OSCAR 7				
Date	Orbit No.	Time Z	Long °W	Date	Orbit No.	Mode	Time Z	Long °W
1	13153	01.13	70	1	3625	B	00.56	64
2	13165	00.13	54	2	3638	A	01.50	77
3	13178	01.08	68	3	3650	B	00.50	62
4	13190	00.08	53	4	3663	A	01.44	76
5	13203	01.03	66	5	3675	B	00.44	61
6	13215	00.03	51	6	3688	A	01.38	74
7	13228	00.58	65	7	3700	B	00.37	59
8	13241	01.53	80	8	3713	A	01.32	73
9	13253	00.52	64	9	3725	B	00.31	58
10	13266	01.48	78	10	3738	A	01.25	71
11	13278	00.48	63	11	3750	B	00.25	56
12	13291	01.43	76	12	3763	A	01.19	70
13	13303	00.43	61	13	3775	B	00.18	54
14	13316	01.38	75	14	3788	A	01.13	68
15	13328	00.37	60	15	3800	B	00.12	53
16	13341	01.32	74	16	3813	A	01.06	66
17	13353	00.32	59	17	3825	B	00.06	51
18	13366	01.27	73	18	3838	A	01.00	65
19	13378	00.27	58	19	3851	B	01.54	78
20	13391	01.22	71	20	3863	A	00.53	63
21	13403	00.22	56	21	3876	B	01.48	77
22	13416	01.17	70	22	3888	A	00.47	62
23	13428	00.17	55	23	3901	B	01.41	75
24	13441	01.12	69	24	3913	A	00.41	60
25	13453	00.12	54	25	3926	B	01.35	74
26	13466	01.07	67	26	3938	A	00.34	58
27	13478	00.07	52	27	3951	B	01.29	72
28	13491	01.02	66	28	3963	A	00.28	57
29	13503	00.02	51	29	3976	B	01.22	70
30	13516	00.56	65	30	3988	A	00.22	55

Magazine Index

With Syd Clark, VK3ASC

CQ March 1975
A Breakthrough in Simplifying Ionospheric Propagation Forecasts; Antennas, The Wideband 20 Metre Array; White House Rips off Amateur Radio; Alternate Sources of Power; Mixers and Local Oscillators for VHF Converters; VFO Design for QRP Transmitters; Docket 20282 and the Novice Licence.

HAM RADIO April & May 1975
Integrated Circuit Electronic Keyer; Microstripline Pre-amplifiers for 1296; Digital Touch-Tone Encoder; Direct Reading Capacitance Meter; Keyboard Morse Code Generator; Variable Crystal Oscillator; Wideband RF Amplifier; VHF Single Frequency Conversion.
Large Vertical Antennas; Log-Periodic Antenna Design; Phased Vertical Array; Open-Grid Parabolic Reflectors; Shunt-Fed Vertical Antennas; 1296 MHz Yagi Array; Measuring Complex Impedance with an SWR Bridge; Electrically Steered Phased Array; 80 Metre Bow-Tie Antenna; Low-Frequency Loop Antenna; Tilt over Tower.

QST April & May 1975
Simple RF Bridges; A Ten-Metre Swiss Quad — Missouri Style; Learning to Work with Semiconductors: Transmitter Design; Varicap Tune Your VFO; The Ultramountaineer; A Low Cost CW Identifier; The Lossless Radiator; A 160 Metre Receiving Loop; The ETO Alpha 374 Bandpass Linear Amplifier; HTACPS Put your FM Handytalkie to Work at Home.
A Parallel 4CX250B Amplifier for 144 MHz; A Convenient Stub-Tuning System for Quad Antennas; Learning to Work with Semiconductors Pt. 2; An Analog Computer Type Active Filter; Slow-Scan to Fast-Scan TV Converter Pt. 2; The City Slicker.

RADIO COMMUNICATION April 1975
A Caption Generator for SSTV; Reduction of an In-Band Spurious Emission in the Liner 2; Testing Fall-out Integrated Circuits; Radio Communications at Frequencies below 10 kHz; Taking the Radio Amateurs' Examination; Building Blocks for the Novice — Diodes.

Silent Keys

NORMAN ERIC MORTLOCK VK2PQ

Many VK and Overseas Amateurs will be saddened at the passing of 'NORM' MORTLOCK VK2PQ late of Randwick and Engadine, N.S.W., on 16th May, 1975 after a long illness at the age of 65 years.

Norm was a well known CW operator on most HF bands as well as a keen VHF 2 metre operator, where he helped many to the full licence with his CW practice sessions during the late 1960s despite his failing health and demanding occupation.

Norm had recently retired from the Department of Customs and Excise and prior to this appointment had been a Technician with the Post Master Generals Department.

Norm was a gentleman who was always ready with a helping hand or word; he will be sadly missed by his friends.

To his family we extend our deepest sympathy.

VK2ZDH

Mr. M. H. MEYERS	VK2VN
Mr. R. S. MITCHELL	VK2AID
Mr. G. WALKER	VK4BX
Mr. J. V. HUTCHISON	VK2JH

MANAGER REQUIRED FOR AMATEUR GEAR

We need a competent manager for our expanding Amateur department. He will report directly to Dick Smith and his responsibilities will include purchasing,importing and selling Amateur gear. He should preferably be an active, licenced Amateur. He will also represent the company at Field Days and other events.

Age is less important than ability and enthusiasm. Phone Dick himself to discuss prospects or write giving experience and salary etc, etc, to DICK SMITH ELECTRONICS Pty Ltd 160-162 Pacific Hwy, Gore Hill 2065 Tel: 439 5311.

HAM RADIO ELECTRONIC BARGAIN CENTRE

390 BRIDGE ROAD, RICHMOND 3121 PHONE: 42 5174

Plenty of BARGAINS for the Radio Amateur or the Hobbyist. Owing to the recent tariff cuts on electrical goods, we have obtained large quantities of components, transformers, panel meters etc. which can be bought at very reasonable prices while they last.

Stereo Tone Arms with ceramic cartridge fitted **$5.90**

Mono Tone Arms with crystal cartridge fitted **$2.00**

2N3055 Transistors with insulating kit **$1.00**

Stolle 300 ohm Feeder with foam dilectric **15c yard**

58 ohm Coax Cable 100 yd. Rolls, ⅛" diam. .... **$12 Roll**

52 ohm Coax Cable ¼" diam. **45c yard, 50c metre**

Dow Key Coaxial Relays 48 Volt DC operation **$15**

Split Stator Capacitors with screwdriver slot drive, 9 pF-17 pF-25 pF. Brand new Eddystone type .... **$4.50 ea.**

Ex Army Headphones approx. 20 ohms impedance. New, in sealed boxes **$2.00**

3" Tape Spools .... **15c ea., $1.00 for 10**

2" Square Face 0-10 mA Meters, calibrated 0-60 .... **$3.00**

Edgewise 0-1 mA Meters 2½" x ½" face, 3" deep, calibrated 0-5 .... **$3.00**

Panel Meters 5⅞" x 4¼" with 0-1 mA movement, various scales on meters (gas analyser, etc.) **$5.00**

30 kHz M.E.W. Crystal Filters 10.7 MHz **$5 each**

3 ft. **Twin Cable Audio Leads** with 3.5 mm plug fitted .... **10 for $2.00**

Plessey Speaker Specials

5" x 3" 3.5 ohm speakers with ferrite magnet **$3.00**

5" round 8 ohm, 4½ watts **$3.50**

5" x 4" 15 ohm, 3½ watts **$3.00**

5" round 15 ohm, 3½ watts **$3.00**

X20 Tweeters, freq. range 3 kz-20 kHz, 20 watts RMS **$6.50**

Car Speakers

7" x 5" 4 or 8 ohms, 5W, compl. with grille **$4.90**

9" x 6" 4 or 8 ohms, 3W, compl. with grille **$5.90**

Car Extension Speaker Controls. Use both speakers together or separately **$1.50**

Wire Wound Potentiometers in the following values: 5 ohm 2 watt, 10 ohm 2 watt, 500 ohm 2 watt, 3000 ohm 2 watt. All **$1.30 ea**

Plastic Turntable Covers (blue tint) 15 x 18 x 3½" deep **$5.00**

Jackson Slow Motion Drives 6:1 ratio **$2.30**

New 240V AC Turntable Motors, 3 speed operation **$2.00**

Car Radio Suppressor Kits (2 condensers, 1 coil lead suppressor) .... **$1 ea**

Car Radio Suppressor Condenser .... **50c ea**

Cigarette Lighter Accessory Plugs **45c ea, 10 for $4**

"Maspro" TV Baluns 300-75 ohm for colour TV .... **$2.50 ea**

Standard Black and Clear TV Ribbon 15c yd

SCOOP PURCHASE

TRANSISTOR RADIO CIRCUIT BOARDS

IDEAL FOR HOME CONSTRUCTORS

Due to Tariff cuts on transistor radios, we can offer the items below at this price. Most are in working order but no guarantees at these prices.

THOUSANDS AVAILABLE

AM 8 TRANSISTOR CIRCUIT BOARDS

All new parts. IFs, capacitors, resistors, etc.

$1.50 each or 3 for $3.50

AM/FM CIRCUIT BOARDS

10 transistors, all new. Ideal for use as FM tuner. 88-108 MHz.

$2.75 or 3 for $7.00

ALSO LARGE QUANTITY OF RADIOS

In various stages of manufacture. Some AC/DC models AM/FM etc. Speakers, cabinets, etc. Personal shoppers only.

From $3 each

TRANSFORMERS A + R TYPE 5509

Ex. equipment, but as new. Pri. 240V. Sec. 2 x 12.6V at 2.5A.

$8 each

"ZEPHYR" 2K ROCKING ARMATURE MICROPHONES

Desk Type with PTT key switch in base. Brand new.

$25

"PHILIPS" TYPE CONCENTRIC TRIMMERS

Threaded stud mounting, 25 pF. **75c**

BRAND NEW 4-TRACK STEREO CARTRIDGE PLAYERS

2-5 Watts per channel at 8 ohms, 12V DC operation. In sealed boxes.

$15 each

MINIATURE SIEMENS RELAYS

4 sets changeover contacts, 6-12V DC operation. Type V23154. New.

$4 each

6 TRANSISTOR RADIO CHASSIS $1 each

TANK WHIP ANTENNAS

16ft., complete with base

$12

C45 TRANSCEIVERS

23-38 MHz, FM, with inbuilt calibrator, approx. 15 Watts output. With 24V DC PSU.

$49

C11 TRANSMITTERS

2-16 MHz, AM or CW, 50 Watts output, inbuilt 100 kHz crystal callbrator. Complete with 24V DC PSU.

$65

MAIL ORDERS WELCOMED. Please allow pack and post on items listed on this page. If further information required send a stamped S.A.E. for immediate reply from the above address.

AUGUST 1975
VOL. 43, No. 8

Completely Solid-State Choice of 40 or 80 METER MONOBANDERS

Designed and engineered for the ham on the move, single-band transceivers put the pleasure of mobile operation within the means of all amateur radio operators. Simple to install and operate, these compact units work directly off any standard 12V DC automobile battery. No transmitter warm-up time or intricate tuning is required. An easy to see Transmit LED Indicator, on the S-meter face, lets you know when your signal is getting out. And, you've never heard better clarity or experienced better performance from such as small, yet handsome, rig.

Experienced hams appreciate the Monobander selectivity, which minimizes all QRM distrubances.

$ 289-00

MONOBANDER SPECIFICATIONS

GENERAL

Frequency Range
MB-40A ..... 40 meters (7.0-7.3 MHz)
MB-80A ..... 80 meters (3.5-4.0 MHz)
Power Source Requirements ... 13.5V DC (nominal) at 5 amps CW, average 1.5 amps SSB transmit and 0.4 amps receive.
Modes of Operation ..... SSB or CW
I.F. Filter ..... Crystal lattice, 2.8 kHz bandwidth, 1.7 shape factor, ultimate rejection in excess of 100 dB.
Dimensions ..... 3"H x 8.5"W x 9"D.
Weight ..... 6 lbs.

RECEIVER

Sensitivity ..... Less than 0.5 microvolt at 50 Ohms for 10 dB signal plus noise-to-noise ratio.
Image Rejection . Better than -70 dB.
CW Sidetone .... Optional MBCW accessory monitors CW keying.
Audio Output ... 4-watts with less than 10% distortion to 3.2 Ohm internal speaker.
Audio Response ..... Essentially flat from 300 to 3000 Hertz ± 3 dB.

SWAN® ELECTRONICS
A subsidiary of Cubic Corporation

INTERSELL PTY. LTD.

LOT 3, MIDSON STREET, OAKVILLE, N.S.W. 2765. PHONE 045-736215.